VENTO
MOTORCYCLES
U.S.A.

Triton R4
Service& Maintenance Manual

VENTO MOTORCYCLES

FORWARD

This service manual has been specially prepared to provide all the necessary information for the proper maintenance and servicing of *VENTO Triton R4* Scooter.
The *Triton R4* has many features such as:

- V-belt drive automatic transmission
- Fan air-cooling system
- CDI Ignition system
- Auto Ignition system
- Alarm System

This manual contains an introductory description on *VENTO Triton R4* and procedures for Inspection/Service and overhaul of its main components. This Manual is intended those who have enough knowledge and skills for servicing of *VENTO* vehicles. Without such knowledge and skills you should not attempt servicing by relying on this manual only. Instead, please contact your nearly authorized *VENTO* motorcycle dealer.

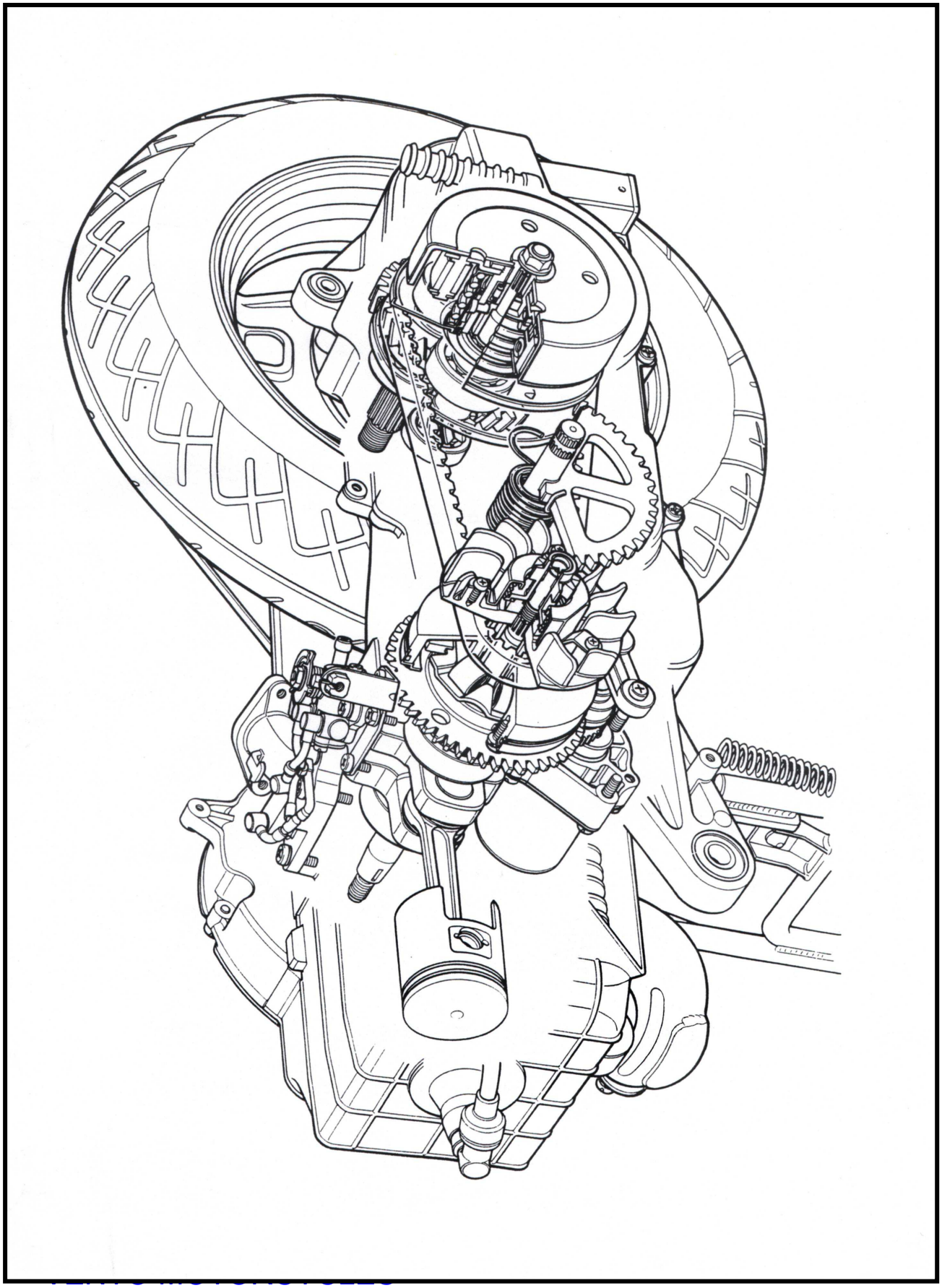

GENERAL INFORMATION

1

CONTENTS

1-1 GENERAL INFORMATION

TYPE & IDENTIFICATION

FRAME NUMBER

FRAME NUMBER ① is Engraving on the steel tube of frame as shown in figure.

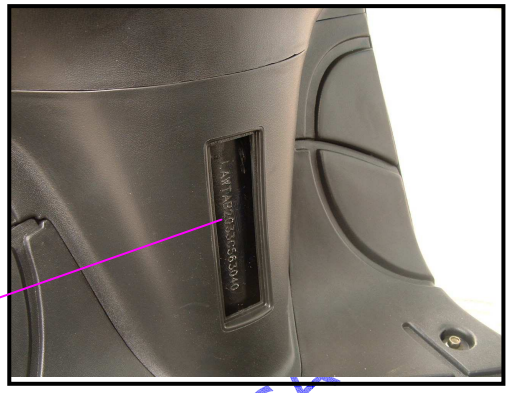

①

ENGINE NUMBER

ENGINE NUMBER ② is Engraving on rear side crankcase as Shown in figure.

Both FRAME NUBER AND ENGINE NUMBER are designed especially for registration your scooter and for spare parts order.

FUEL AND ENGINE OIL RECOMMENDATION

Be sure to use specified fuel and engine oil.
Some specifications are as follows:

FUEL

- Gasoline should be Unleaded, the octane number must be 90.

ENGINE OIL

For engine lubrication, you can use specified high quality two-stroke engine oil (without being diluted).

GEAR OIL

Use high quality, all-purpose SAE 85W/90 Gear oil for this scooter. Make sure that the Engine oil/Gear oil what you are using should come under API classification.

BREAK-IN PROCEDURES

During manufacture only the best possible materials are used and all machined parts are finished to a very high standard but it is still necessary to allow the moving parts to ***"BREK-IN"*** before subjecting the engine to maximum stresses. The future performance and reliability of the engine depends on the care and restraint during its early life.

General requirements are as follows

- Limit break-in speed
  At the first **1000 ms (**630 miles mileage use throttle opening less than 1/2.
  Up to **1600 Kms** 1000 miles mileage use throttle opening less than 3/4.

- Upon reaching an odometer reading of 1600 Kms(1000 miles) you can subject the motorcycle to full throttle operation.
- Do not maintain constant engine speed for on extended time period during any portion of the ***"BREAK-IN"*** period, try to vary the throttle position.

1-2 GENERAL INFORMATION

PRECAUTIONS AND GENERAL INSTRUCTIONS

GENERAL PRECAUTIONS:

WARNING

- Proper service and repair procedures are important for the safety of the service mechanic and the reliability of the vehicle.
- When two or more persons are working together, pay attention to the safety of each other.
- When it is necessary to run the engine indoors, make sure that the exhaust gas is forced outwards and ventilation should be proper.
- When working with toxic or flammable materials, make sure that the area you work in is well ventilated and that you follow all off the material manufacturer's instructions.
- Don't use gasoline as a cleaning agent.
- After servicing the motorcycle check all lines i.e. fuel, oil and brake lines for leaks.
- Whenever you remove Oil seals, Gaskets, packing, O-rings, Locking washers, Cotter pins, Circlips, and certain other parts as specified, be sure to replace them with ones. Also before installing these new parts be sure to remove any left out material from the mating surfaces.
- Never reuse a circlip, when installing a new circlip, take care not to expand the end gap larger than required to slip the circlip the shaft. After installing a circlip, always ensure that it is completely seated in its groove and securely fitted.
- Do not use self- locking nuts a few times over.
- If parts replacement is necessary, replace the parts with ***VENTO*** Genuine parts or their equivalent.
- When removing parts that are to be reused, keep them arranged in an orderly manner so that they may be reinstall in proper order and orientation.
- Always use special tools when required.
- Always use specified lubricant, bond& sealant.
- While removing the battery, disconnect the ***Negative terminal / Cable*** first then ***Positive terminal / Cable*** and when reconnecting the battery, connect the ***Positive terminal / Cable*** first then ***Negative terminal / Cable.***
- During Service to electrical parts, if no need of battery power then please disconnects the ***Negative terminal / Cable*** of the battery.
- During tightening of Cylinder head and crank case bolts and nuts start with larger diameter and ending with smaller diameter, from inside to outside diagonally, with the specified tightening torque values.
- After reassembly, recheck parts for tightness and operation.

REPLACEMENT COMPONENTS

Be sure to use genuine *VENTO* spare parts or their equivalent. Genuine *VENTO* components are high quality parts, which are designed specially for *VENTO* vehicles.

CAUTION

Scooter/motorcycle may damage by using non genuine parts or parts that is not equivalent to *VENTO* parts and will be affecting performance also.

1-3 GENERAL INFORMATION
SPECIFICATIONS

DIMENSIONS

Over all length ……1830mm
Over all width ……695mm
Over all height……1160 mm
Wheel base ……1295mm
Net weight……92kg

CHASSIS

Front shock absorber……Hydraulic
Rear shock absorber……Spring, oil damp
Turning angle……48º(toward the left & right)
Front wheel……120/70-12
Rear wheel……130/70-12
Front brake……Disc φ190 mm
Rear brake……Drumφ110 mm

ENGINE

Type……Two-stroke,fan cooling

Intake system……Reed valve
No. of cylinder……1
Bore……40.0mm
Stroke……39.6mm
Displacement ……49.8mL
Compression ratio……6.9:1
Carburetor……Side draft

Air cleaner……Dry PU foam
Starting system……Electric and kick start
Lubricating system…… Lubrication by oil pump

ELECTRICAL

Ignition System--------- Electronic CDI
Ignition Timing--------- 15^0 at 5000 RPM
Spark Plug---------- NGK/R/BR8HSA
Storage Battery----Yuasa/ YTX5L-BS

Battery Capacity----------12V-4Ah
Magneto----------AC
Fuse---------- 8Amp
Headlight----------12V 35 / 35 Watt
Turn Indicators (X4)----------12V / 10 Watt
Tail light/stop light----------12V / 5Watt
Meter light----------12V / 1.7Watt
Oil level Indicator light---------12V / 1.7 Watt
Turn signal Indicator light-----12V / 3Watt
High beam Indicator light----12V/3 Watt
Alarm light (LED)----------12V / 1.7Watt

CAPACITY

Fuel Tank----------5.2L
Engine Lubricating Oil Tank---0.9L
Gear Oil----------0.1L

TRANSMISSION

Clutch System------- Automatic, Centrifugal Type

Gears shifting mechanism ---------Automatic
Primary Reduction---------- 1
Gear Reduction ratio
The first gear----------4.0
The second gear----------2.933
Drive System ----------V-Belt drive
CVT Reduction ratio----------0.8~2.2

CONTENT

2-1 PERIODIC MAINTENANCE SCHEDULE

The chart below lists the recommended intervals for all the required periodic service work necessary to keep the motorcycle operating at peak performance and economy. Mileages are expressed in terms of Kilometer, Miles and time for your convenience.

Note:

More frequent servicing may be performed on motorcycles that are used under bad road condition.

PERIODIC MAINTENANCE CHART

Interval	Miles	630	1890	3150	4410	6300
	Kilometer	1000	3000	5000	7000	10000
	Months.	2	12	24	36	48
Storage battery		I	I	I	I	I
Cylinder head nut and exhaust pipe bolt		T	T	T	T	T
Cylinder head and cylinder		—	C	C	C	C
Spark plug		—	C	R	C	R
Air cleaner		Inspect & Clean every 3000 Kms (1890 miles) Replace every 10000 Kms(6300 Miles)				
Idle speed (rpm)		I	I	I	I	I
Throttle cable play		I	I	I	I	I
Oil pump		I	I	I	I	I
Gear oil		R	R	R	R	R
Fuel line		I	I	I	I	I
		Replace every 4 years				
Brake		I	I	I	I	I
Brake hose		I	I	I	I	I
		Replace every 4 years				
Brake fluid		I	I	I	I	I
		Replace every 2 years				
Steering		I	I	I	I	I
Front fork		I	I	I	I	I
Rear shock absorber		I	I	I	I	I
Tire		I	I	I	I	I
Vehicle body bolts and nuts		T	T	T	T	T

Note:

- ***I=inspect□clean□adjust□lubricate□or replace if necessary□***
  A=adjust□ C=clean□ R=replace□ T=tighten

2-2 PERIODIC MAINTENANCE PROCEDURE

BATTERY INSPECTION AND CHECKING PROCEDURE

Storage Battery

Inspect at initially 1000Kms□630 miles□2 months□□and every 6000 Kms□3780 miles□12 months□

- Open the battery box cover from the foot rest.

- ***Disconnect Negative terminal / Cable*** first then ***Positive terminal / Cable*** of Battery.

- Measure the voltage between the +ve and –ve terminal of Battery charge the Battery if the voltage is below the specified limit.

Remove the battery from the Motorcycle/Scooter. Connect the battery on load tester ensuring Red lead of tester to (+ve) and Black lead to (-ve) terminal of battery. Check the terminal voltage of battery. It should be 12~14.5 Volts. Press the push button on the tester and watch the voltmeter reading on load. The battery voltage should not drop down less than 9 volts; this indicates that the battery is perfect to take load of self-starter motor. Check the specific gravity of each cell should not be less than 1.220.Put the battery on charge, if required and carry out load test.

- **Diagnose the nature of failure as under:**
- **BATTERY CELL DEAD TEST:** On load if battery voltage is found less than 9.5Volt and one or more cell shows specific gravity less than 1.220 then change the battery.
- **OPEN CIRCUIT:** During the charging of battery does not pickup the charge. In any of the above case, replace the battery.
- **RECOMDED BATTERY LOAD TESTER: MAKE—ELAK, MODEL: ---BCT7**
- **CAUTION: During Inspection, if the battery on the vehicle is found defective, before replacing with a new battery, it is important to check the battery charging circuit.**

BATTERY CHARGING CIRCUIT TEST

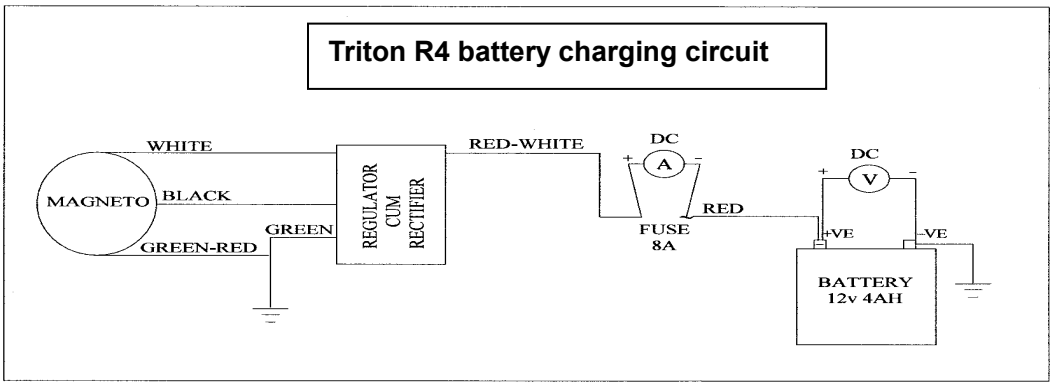

The MAGNETO generated AC current, which is rectified into DC current by Voltage Regulator .It, is automatically charging the battery depending upon condition of the battery, load and engine rpm. Regulator is connected in parallel to the circuit. Hence this type of system is called “PARALLEL LOAD REGULATOR”.

Connect DC Voltmeter and DC Ammeter, start the engine with fully charged good battery. The Voltage Regulator output is as follows.

- Battery charging current range in between 0.6 Amp to 2Amp.
- The engine speed @ 5000 rpm with headlamp on condition.
- Battery terminal charging voltage > 11.5 V at any load condition (depending upon the condition of battery)

NOTE 1

Incase charging output is less than 0.6 Amp or more than 2.0Amp then replace the Voltage Regulator with new one and recheck.

NOTE 2

AMMETER: ---Series connection inline with positive battery wire to measure DC –Amp.

VOLTMETER: ---Parallel connection between positive & negative terminal of the battery to measure DC-Volts.

IMPORTANT TIPS ON BATTERY

SPECIFIC GRAVITY	The Specific Gravity of fully charged battery should be 1.220~1.240 Use Hydrometer to check each cell of battery.
WARNING	Remove negative terminal first, then positive terminal. If the battery is corroded by sulfur. Please exchange it. If the terminal of the battery has too much precipitate, please exchange it.
CHARGING	Charging is necessary at less than 1.220 Specific Gravity for old battery. It changes according to electrolyte temperature. Connect positive terminal of charger to positive battery wire & negative terminal of charger to negative battery wire.
CHARGING CURREENT	For 2.5 Ah battery the charging current should be Maximum 0.25Amp. For 6.0 Ah battery the charging current should be Maximum 0.6Amp.
CHARGING TIME	For new battery 8-12 hrs. For old battery 12-14 hrs.
WARNING	Always open all the caps of battery before charging. Keep flames & sparks away from the battery. Turn ON or OFF Switch at charger & not at battery terminal Don't charge the battery, if electrolyte temperature is more than 45ºC. Do not quick charge the battery.
INSTALLATION	Connect positive terminal first, then negative terminal.
BATTERY CAPACITY	*12Volt- 4Ah /YB4L-B/YUASA*
RECOMMENDED BATTERY CHARGER	Make: ELAK Model C1/48
RECOMMENDED HYDROMETER	Make: THIMSON Model: 108
NOTE	• Always top up battery with the distilled water up to the maximum level (Never use Acid to top up the old battery). • Always ensure new battery is being charged in cold condition after filling with the electrolyte. • Always ensure that battery breather tube is not clogged, crimped or bent. Breather tube should be properly routed. • ***Incase if Motorcycle/ Scooter is not being used for longer period, then first charge the battery fully & then connect only positive terminal to Motorcycle / Scooter.***

Cylinder head nuts and exhaust pipe bolts

Tighten at Initially 1000 km□630 miles□or 2 moths□□and every 6000 km□3780 miles□or 12 months□

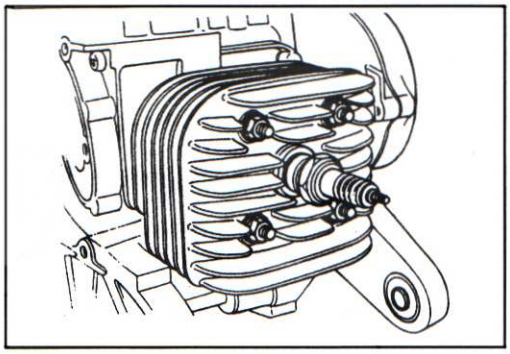

If cylinder head nuts are not tightened to the specified torque, may result in leakage of compressed fuel-air mixture and reduce output, tighten the cylinder head nuts in the following procedures: □

1□ Remove the frame lower covers.
2□ Remove the cylinder head cover bolt.
3□ Remove spark plug Suppressor cap.
4□ Tighten the nuts evenly one by one to the specified torque. Tighten the nuts in the Specified order.

Tightening Torque□

Cylinder head nut□15-18N.m

Exhaust pipe bolt□15-18N.m

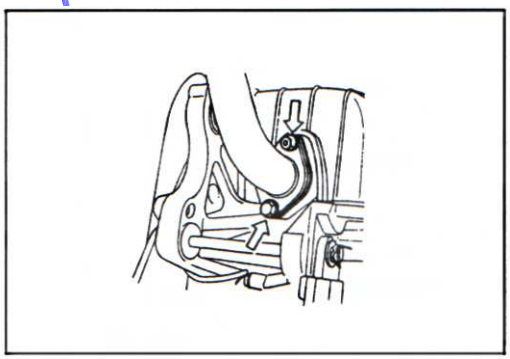

Cylinder and cylinder head

Remove carbon every 6000 km□3780 miles□or 12 months□

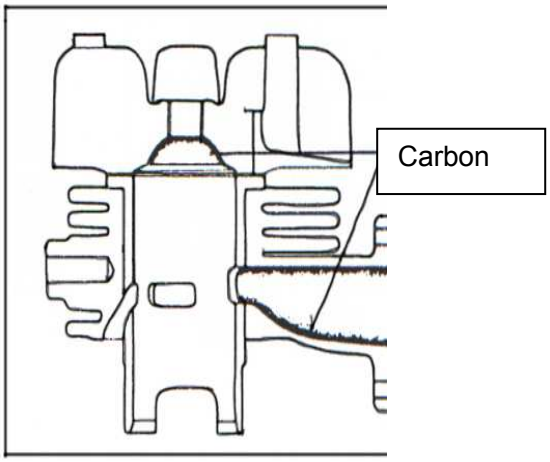

Carbon deposits in the combustion chamber and the cylinder head will raise the compression ratio and may cause preignition and overheating. Carbon deposition at the exhaust port of the cylinder will prevent the flow of exhaust gases, reducing the output. Remove carbon deposits periodically as per specified schedule.

2-4 *Periodic maintenance and adjustment procedures*

SPARK PLUG

Neglecting the spark plug maintenance eventually leads to difficult starting and poor performance. If the spark plug is used for a long time, the electrode gradually burns away and carbon builds up along the inside part. In accordance with the periodic table, the plug should be removed for inspection, cleaning and to reset the gap.

- Carbon deposits on the spark plug will prevent good sparking and cause misfiring. Clean the carbon deposits periodically.
- ***CARBON DEPOSIT***

  Check to see the carbon deposit on the Spark Plug. If the carbon is deposited, remove it with a spark plug cleaner machine or carefully using a tool with a pointed end.
- Check to see the worn out or burnt condition of the electrodes. If it is extremely worn or burnt, replace the plug and also replace the plug if it has a broken insulator, damaged thread etc.

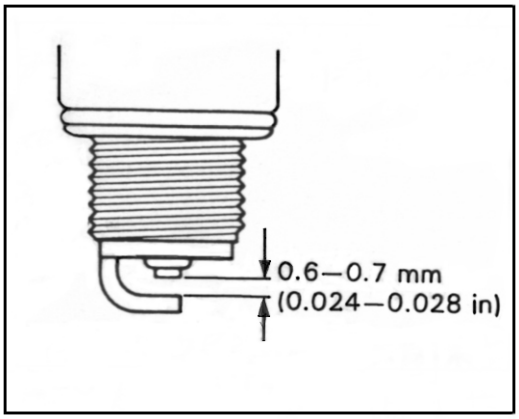

Thickness gauge

Spark plug gap□0.6~0.7 mm (0.024-0.028 inch)

Check the spark plug for burnt condition. If abnormal replace the

- Tighten the spark plug to the specified torque.

Spark plug
Tightening torque:15-18N.m

NOTE:

- ***To check the spark plug, first make sure that the fuel used is unleaded gasoline.***
- ***Confirm the Specification, thread size and reach while replacing the spark plug.***

2-5 PERIODIC MAINTENANCE AND ADJUSTMENT PROCEDURE

AIR CLEANER :

Clean every 3000 Kms□1890 miles□Replace every 12000 Kms(1750 Miles)

If the air cleaner is clogged with dust, Air Intake resistance will be increased with a result decrease in power output and will be increase in fuel consumption. Check and clean the filter element in the following manner.

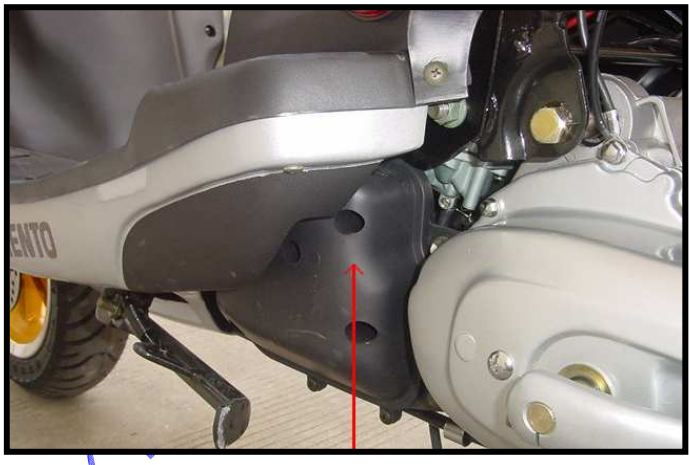

- □ Remove clamp and mounting screw & take out air cleaner
- □ Unscrew tapping screw□remove air cleaner cover
- □ Fill a washing pan of a proper size with Non-flammable cleaning solvent. Put the air Cleaner element in the cleaning solvent and wash properly.
- □ Squeeze the cleaning solvent out of the washed element. By pressing it between the palms of both hands: do not twist or wring the air cleaner element or it will develop tears.
- □ Immerse cleaned filter element in CCI or CCI Super oil and Squeeze the oil out of the element leaving it slightly wet With oil. Fit the element to the Air cleaner case properly
- □ Install Air cleaner in the reverse order of removal.

CAUTION□

- Before and during the cleaning operation, inspect the core for tears. A torn filter element must be replaced with new one.
- ***Be sure to position the filter element snugly and correctly□ So that no incoming air will bypass it. Remember, rapid wear of piston rings and cylinder bore is often caused by a defective or poorly fitted filter element .***
  A- Non-flammable cleaning solvent(Kerosene)
  B- CCI OR CCI Super oil or SAE 80 or 90 Gear oil.

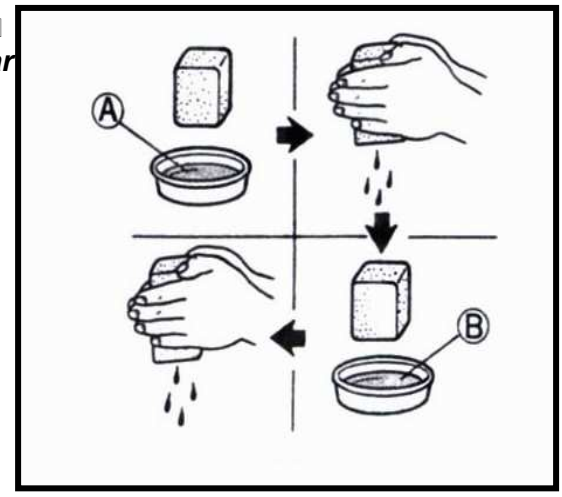

THROTTLE CABLE

Adjust at initially 1000Kms□630 miles□or after 2 months□□ And after every 6000 Kms□3780 miles□or after12 months□ thereafter.

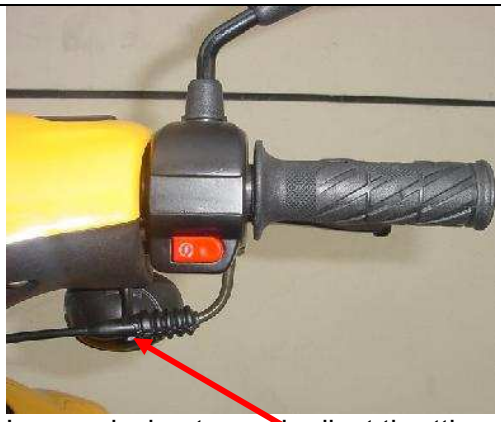

Loosen locknut □and adjust throttle cable play by turning adjuster in or out to obtain the following cable play. After adjusting the cable Play□tighten the locknut.

Cable play□0.5-1.0MM□0.02.-0.040 inch□

ENGINE IDLE SPEED

Adjust at initially 1000Kms□630 miles□or after 2 months□ and Every 6000 kms (3780 miles□or after12 months□ thereafter.

- Adjust the throttle cable play.
- warm up the engine at normal running condition

***NOTE*:**

A warm engine means an engine that has been run for 10 minutes.

- Connect a Digital Tachometer to the connecting portion of the magneto lead wire as shown In the illustration. Use the selector key "C" position.

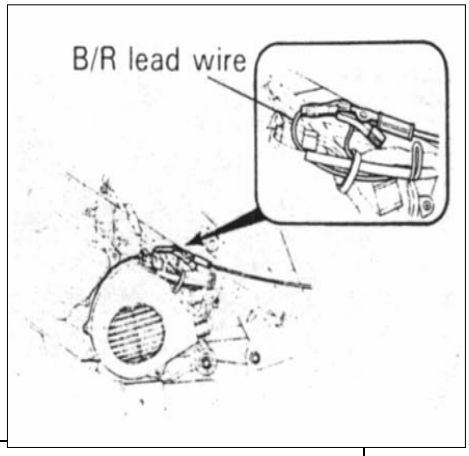

Adjust the Idling Screw ⦶ to obtain the Idling RPM as follows:

Idling Speed□1800±100 RPM

- Finally adjust the throttle cable play.

FUEL LINE

Inspect at initially 1000 km □630 miles□or after 2 months) and Every 6000 km (3780 miles□or after12 months), replace after every 4 years.

2-6 PERIODIC MAINTENANCE PROCEDURE

OIL PUMP:

Inspect at Initially 1000 Kms□630 miles□2 months□ and every 6000 kms□3780 miles□or 12 months□there after.

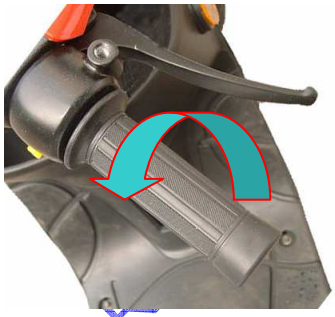

The oil pump to the engine feeds the engine oil. The amount of oil fed to It is regulated by engine speed and oil pump control lever, which is controlled by amount of throttle opening.
Check the oil pump in the following manner to confirm correct operation for Throttle valve full opening position.

- Turn the throttle grip full open.
- Check whether mark on the oil pump control lever's aligned with the index mark when the throttle valve is positioned as above.
- If the marks are not aligned, loosen lock nuts and turn the adjuster in or out to align the marks.
- After align the marks, tighten the locknuts.

.

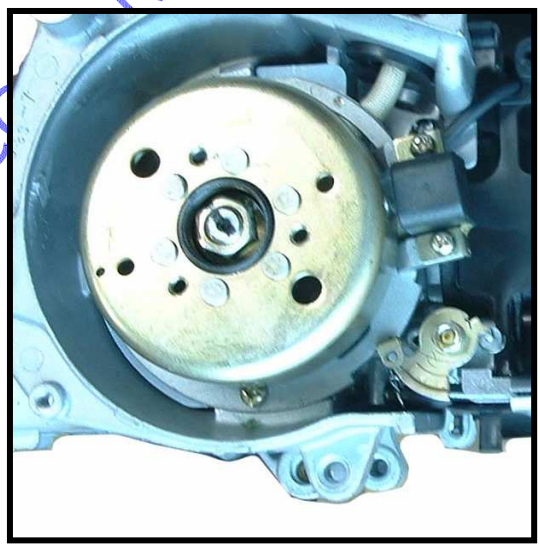

Caution□

Oil pump cable adjustment must be done after throttle cable adjustment.

2-7 PERIODIC MAINTENANCE PROCEDURE

GEAR OIL:

Inspect at initially 1000 km□600 miles□or 2 months□and every 2000 km□1260 miles□or 12 months□thereafter.

Inspect gear oil periodically as follows:

- □ Remove the cover and hose.
- □ Remove the kick-start lever.
- □ Remove clutch cover
- □ Remove oil level bolt and inspect oil level, if oil level is below the
- □ oil hole level, Add oil until oil flows from the level hole.
- □ Tighten oil level bolt to the specified torque.

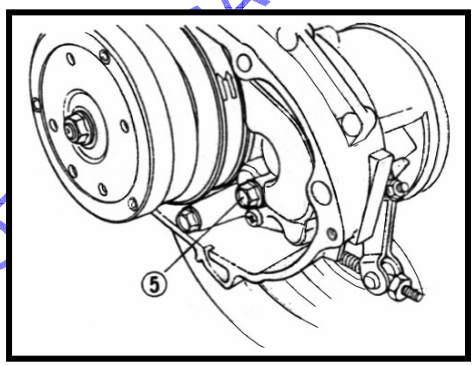

Tightening torque□

9-15N.m(0.9-1.5 kg-m)

BRAKE:

Inspect at initially 1000 km□600 miles□2 months□ and every 6000 km□4000 miles□12 months□thereafter, replace brake fluid after every 2 years, replace brake hose after every 4 years.

Front brake fluid level

- □ Keep the scooter upright and place the handlebar straight.
- □ Check brake fluid level by observing the lower limit line on the brake fluid reservoir.
- □ When the level is below the lower limit line, replenish with Brake fluid that meets the following specification.

Specification and classification □DOT 3 or DOT4

WARNING□

The brake system of this scooter is filled with a glycol-based brake fluid. Do not use or mix different types of fluid such as silicone-based and petroleum-based. Do not use any brake fluid taken from old, used or unsealed containers. Never re-use the brake fluid left over from the last servicing or stored for long periods.

2-8 PERIODIC MAINTENANCE PROCEDURE

BRAKE PADS (FRONT BRAKE)

Observing the limit can check the Wear condition of brake pads Line ⦶ marked on the pad. When the wear exceeds the limit mark, replace The pads with new ones.

CAUTION:

Replace the brake pad as a set, otherwise braking efficiency will be adversely affected.

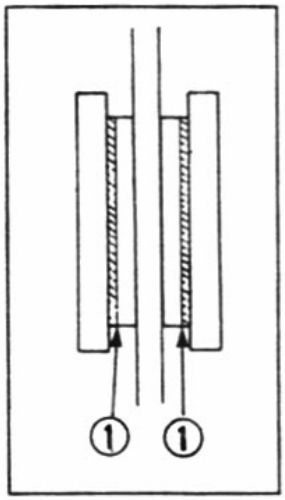

AIR BLEEDING FORM THE BRAKE FLUID CIRCUIT(FRONT BRAKE)

Air trapped in the fluid circuit acts like a cushion to absorb a large proportion of the pressure developed by the master cylinder and thus interferes with the full braking performance of the brake caliper. The presence of air is indicated by “sponginess” of the brake lever and also by lack of braking force. Considering the danger to which such trapped air exposes the machine and rider, it is essential that, after remounting the brake and restoring the brake system to the normal condition, the brake fluid circuit is purged of air in the following manner:

- Fill up the master cylinder reservoir to the upper end of the inspection window. Replace the reservoir cap to prevent entry of dirt.
- Attach a pipe to the caliper bleeder valve, and insert the free end of the pipe into a receptacle.

□ Bleed air from the bleeder valve.

□ Squeeze and release the brake lever several times in rapid succession. And squeeze the lever fully without releasing it. Loosen the bleeder valve by turning it a quarter of a turn so that the brake fluid runs into the receptacles: this will remove the tension of the brake lever causing it to touch the handlebar grip. Then, close the valve, pump and squeeze the lever, and open the valve. Repeat this process until the fluid flowing into the receptacle no longer contains air bubbles.

NOTE

When bleeding the braking system, replenish the brake fluid reservoir if necessary. Make sure that there is always some fluid visible in the reservoir.

□ Close the bleeder valve, disconnect the pipe. Fill the reservoir with specified brake fluid to the **UPPER** end of the inspection window.

TIGHTENING TORQUE BLEEDER VALVE: 6-9N.m(0.6-0.9kg-m, 4.5-6.5lb-ft)

CAUTION

Handle brake fluid with care: The brake fluid reacts chemically with paint, plastics, and rubber materials, etc.

2-9 PERIODIC MAINTENANCE AND ADJUSTMENT PROCEDURE:

BRAKELEVR PLAY(REAR BRAKE) : Turn adjusting nut so that the play of Brake lever should be 15-25mm(0.6-0.8) as shown.

BRAKE SHOE WEAR:

This vehicle is equipped with the brake lining limit Indicator on the rear brake.

Inspect brake lining limit as follows

- First check if the brake system is properly Adjusted.
- When operating the brake, check to see that the tip of indicator is within the range.
- If the tip of indicator is beyond the range, the brake shoe assembly should be replaced with a new set of shoe.

TIRE:

Inspect at initially 1000Kms□630 miles□2 months□ and every 6000KM□3780 miles□12 months□thereafter

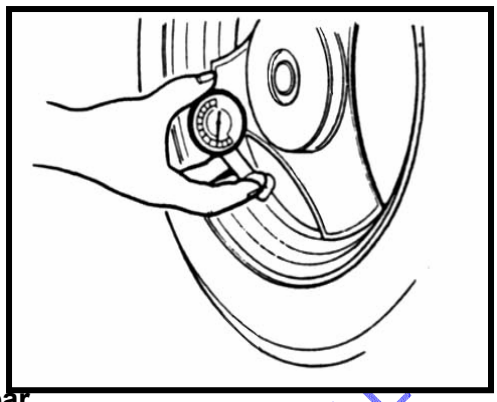

Tire pressure□

If the tire pressure is too high, the steering will be Adversely affected and tire wear increased. Conversely, if tire pressure is too low, stability will be adversely affected. Therefore, maintain the correct tire pressure for good drivability and to prolong tire life.

CAUTION□

The standard tire fitted on the scooter is 3.50-10 for front and rear
The use of other Than standard may cause handling instability. It is highly recommended to use genuine tire.

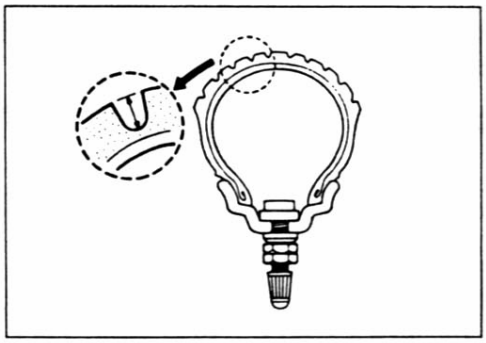

Tire tread condition□

Operating the scooter with the excessively worn tires will decrease riding stability and consequently invite dangerous situation. It is highly recommended to replace the tire when the remaining depth of tire trea reaches the following specification.

Tire Tread depth limit: 1.6 mm□0.064 Inch□

- ***Use Tire depth gauge***

STEERING

Inspect at initially 1000 kms□630 miles□2 months□ and every 6000 kms(3780 miles) thereafter.

Steering should be adjusted properly for smooth turning of handlebars and safe running. Over tight steering prevents smooth turning of handlebars and too loose steering will cause poor stability. Check that there is no play in the front fork assembly by supporting the machine so that the front wheel is off the ground, with wheel straight ahead, grasp lower shock absorber near the axle and pull forward. If play is found, perform steering bearing adjustment.

FRONT FORK:

Inspect &Adjust at initially 1000 kms□630 miles□2 months□and every 6000 km□3780 miles□12 months□ thereafter.

Inspect the front shock absorber for oil leakage or other damage, and replace the defective parts, if necessary.

REAR SHOCK ABSORBER:

Inspect &Adjust at initially 1000 kms□630 miles□2 months□and every 6000 km□3780 miles□12 months□ thereafter.

Inspect the rear shock absorber for oil leakage and mounting rubbers including engine mounting for wear and damage, and replace the defective parts, if necessary.

CHASSIS BOLTS AND NUTS:

Inspect &Adjust at initially 1000 kms□630 miles□2 months□and every 6000 km□3780 miles□12 months□ thereafter.

These bolts and nuts listed below are important safety components. They must be Specified tightening torque.

No.	Description	N•m	Kg-m
1	Front axle nut	55-60	5.5-6
2	Handle tightening nut	37-44	3.7-4.4
3	Steering stem locknut	37-44	3.7-4.4
4	Disc brake caliper fixing bolt	22-29	2.2-2.9
5	Disc brake master cylinder hose fixing bolt	22-29	2.2-2.9
6	Disc brake fixing bolt	5-9	0.5-0.9
7	Front shock absorber fixing bolt	37-44	3.7-4.4
8	Engine pivot fixing nut	55-60	5.5-6
9	Engine bracket fixing nut	37-44	3.7-4.4
10	Rear wheel fixing nut	100-130	10-13
11	Rear brake rocker arm fixing bolt	5-9	0.5-0.9
12	Rear shock absorber under fixing bolt	22-29	2.2-2.9
13	Start pedal mounting screw	15-20	1.5-2
14	Rear shock absorber top fixing bolt	37-44	3.7-4.4

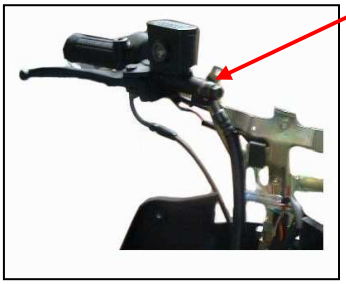

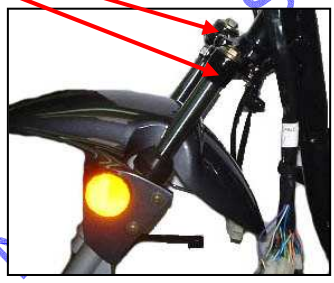

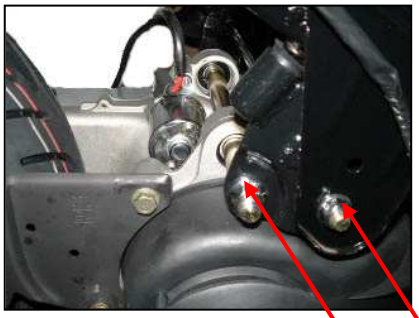

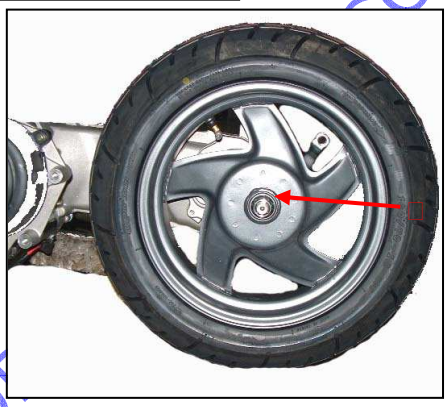

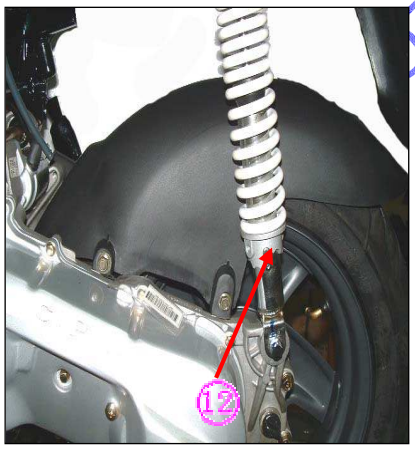

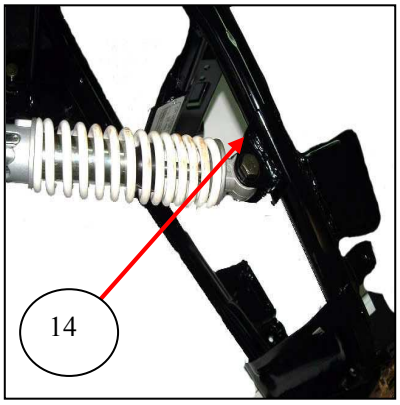

COMPRESSION PRESSURE CHECK

The compression of the cylinder is a good indicator of its internal condition. The decision to overhaul the cylinder is often based on the results of a Compression test.
Periodic maintenance records kept at your dealership should include compression readings for each maintenance.

COMPRESSION PRESSURE SPECIFICATION

STANDARD	LIMIT
1400 Kpa(14Kg/Cm^2,198psi)	**980 Kpa (9.8Kg/Cm^2,139psi**

LOW COMPRESSION PRESSURE CAN INDICATE ANY OF THE FOLLOWING CONDITIONS:

- Excessive worn cylinder wall.
- Worn-down piston or piston rings.
- Piston rings stuck in grooves.
- Ruptured or otherwise defective cylinder head gasket.

COMPRESSION PRESSURE TESTING PROCEDURE

NOTE:

- Before testing the engine for compression pressure, make sure that the cylinder head nuts are tightened to the specified torque values.
- Have the engine warmed up Idling before testing.
- Be sure that the battery used is in fully- charged condition.

Remove the parts concerned and test the compression pressure in the following manner.

- Support the motorcycle with the center stand.
- Remove the Suppressor cap.
- Remove the spark plug.
- Fit the Compression gauge in plug hole, while taking care that the connection tight.
- Keep the throttle grip in full open position.
- While cranking the engine a few seconds with the starter, and record the maximum gauge reading as the compression of that cylinder.

AUTOMATIC CLUTCH INSPECTION

This *VENTO Triton R4* is equipped with an automatic clutch and variable ratio belt drive transmission. The engagement of the clutch is governed by engine RPM and centrifugal mechanism located in the clutch.
To ensure proper performance and longer lifetime of the clutch assembly it is essential that the clutch engagement smoothly and gradually.
The following inspection must be done:

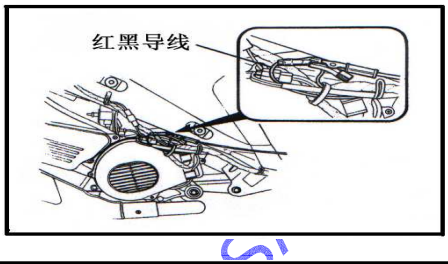

1. *INITIAL ENGAGEMENT INSPECTION:*
   - Warm up the engine to its normal running temperature.
   - Connect the digital tachometer.
   - Seated on the motorcycle on the level ground, increase the engine RPM slowly and note the RPM at which the motorcycle begins to move forward.

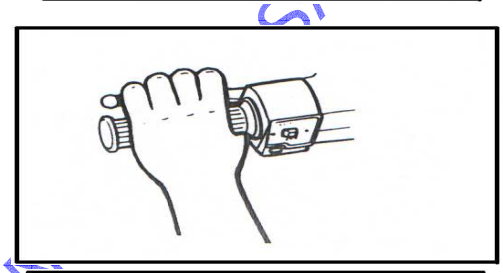

ENGAGEMENT RPM: 2700~3100 RPM

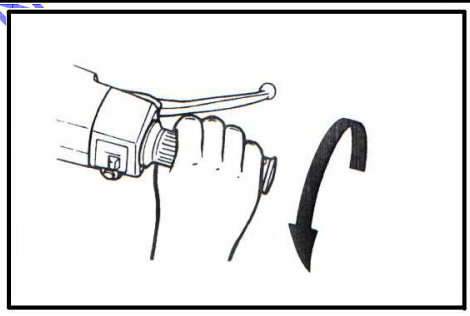

2. *CLUTCH LOCK-UP INSPECTION:*
Perform this inspection to determine if the clutch is engagement and not slipping.
   - Apply the rear brake as firm as possible.
   - Briefly open the throttle fully and note the maximum engine RPM Sustained during the test cycle.

LOCK-UP RPM: 3900~4700

Do not apply full power for more than 3seconds, damage may occur to the clutch or engine.

CHAPTER 3

ENGINE

CONTENS

ENGINE COMPONENTS REMOVABLE WITH THE ENGINE IN PLACE

The parts listed below can be removed and reinstalled without removing the engine from the frame.

Engine left side

- Kick starter lever
- Clutch cover
- Kick starter shaft
- Kick driven gear
- Fixed drive fan
- Fixed drive gear
- B-belt
- Movable drive face
- Starter driven gear
- Starter drive gear
- Clutch housing
- Gear case cover
- Transmission gear
- Clutch shoe

Engine center

- Intake pipe
- Reed valve
- Oil pump
- Oil pump gear
- Cylinder head
- Cylinder
- Piston

Engine right side

- Cooling fan
- Magneto
- Starter motor

ENGINE REMOVAL AND REINSTALLATION

ENGINE ASSY.

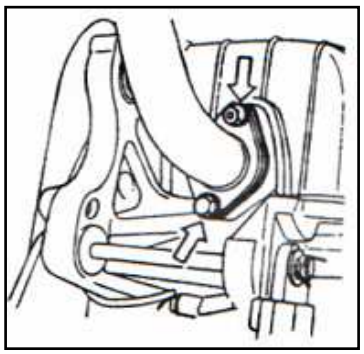

- **Remove the muffler**
- **Remove cooling fan cover**
- **Remove cylinder cover**
- **Remove cooling fan**

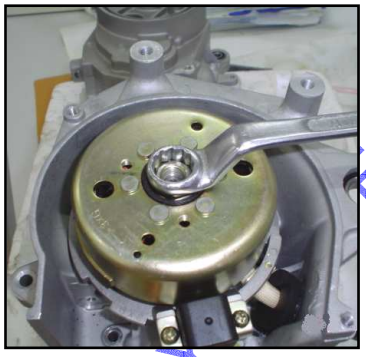

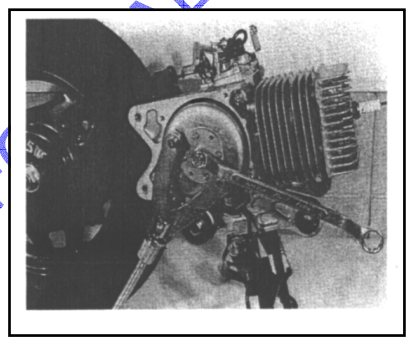

- **Remove magneto nut with special tools.**

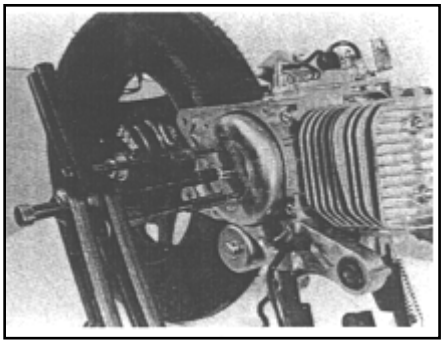

- **Remove magneto rotor and half circle key with special tools.**

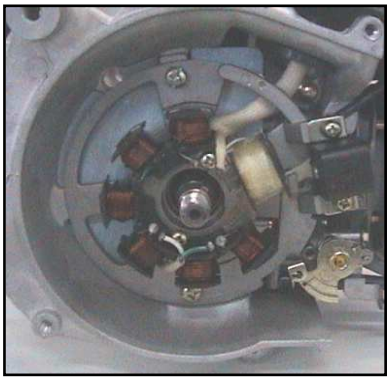

- **Remove magneto stator and paper gasket**

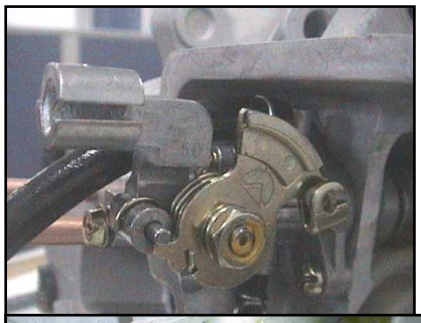

- **Remove oil pump**

- **Remove worm wheel and oil seal press board**

- **Remove cylinder head and cylinder**

- **Place a cloth stopper below the piston and remove the circlip with a plier.**

- **Remove the piston pin and piston.**
- **Remove the piston rings from the piston.**

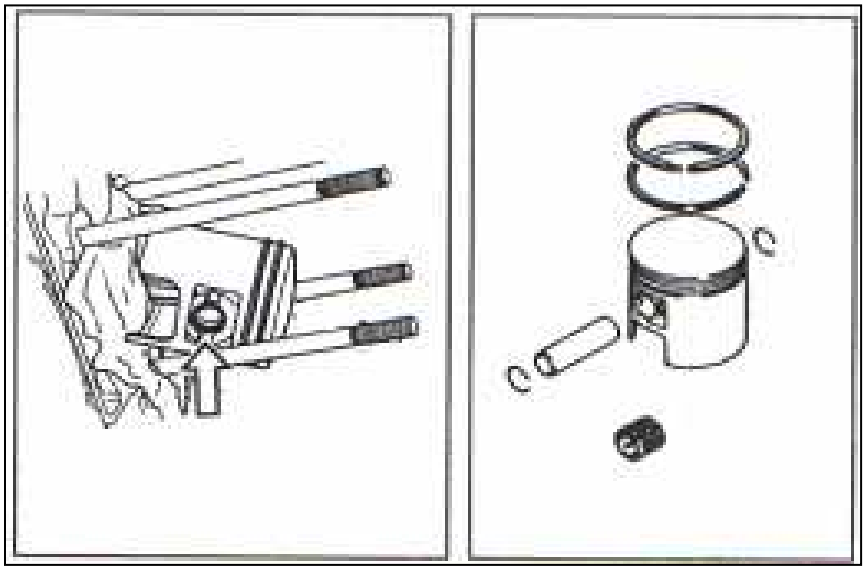

- **Remove the kick starter lever.**

- **Remove side cover.**

- **Remove movable ratchet wheel and clip**

- **Remove starting driven ratchet wheel by removing the nuts.**

- **Remove fan ⑤ and V-belt ⑥.**
- **Disassemble the movable drive Face ⑦.**

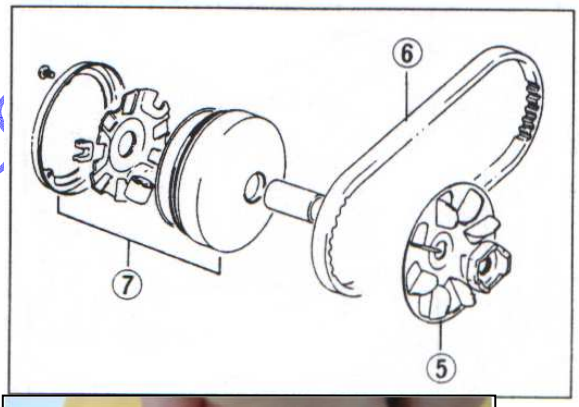

- **Remove electric gear press board, electric gear and super clutch.**

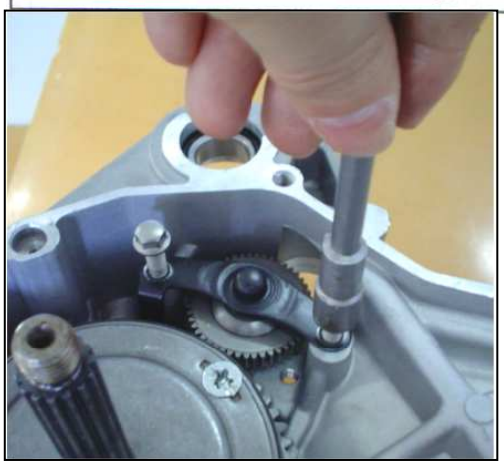

- **Remove starter motor**

- **Remove the clutch housing with the special tool.**

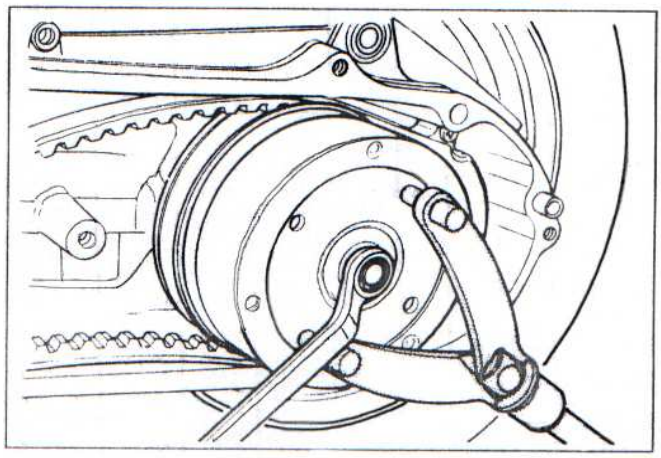

- **Drain gear oil**

- **Remove rear axle nut**
- **Remove rear wheel**

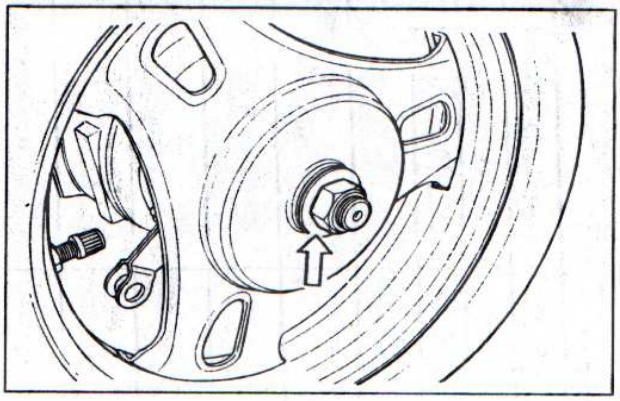

- **Remove brake shoe ❺ and rear axle ❻.**

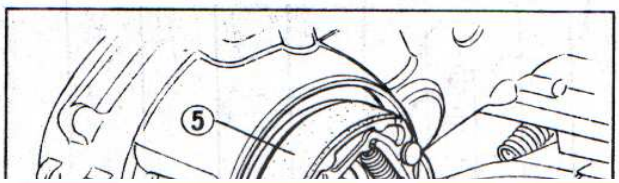

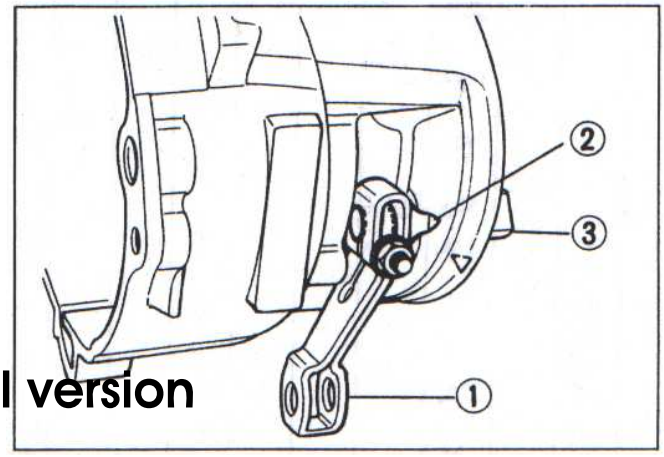

- Remove the rear brake cam lever ① indicator plate ② and camshaft ③.

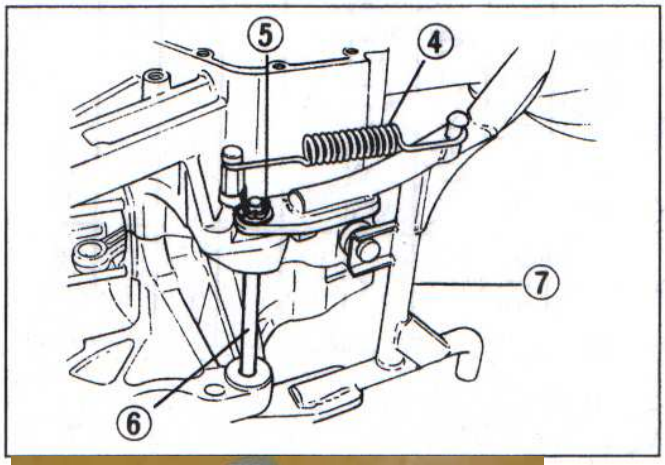

- Remove spring ④
- Remove cotter pin ⑤ and shaft ⑥
- Remove main stand ⑦

- Remove gear case cover

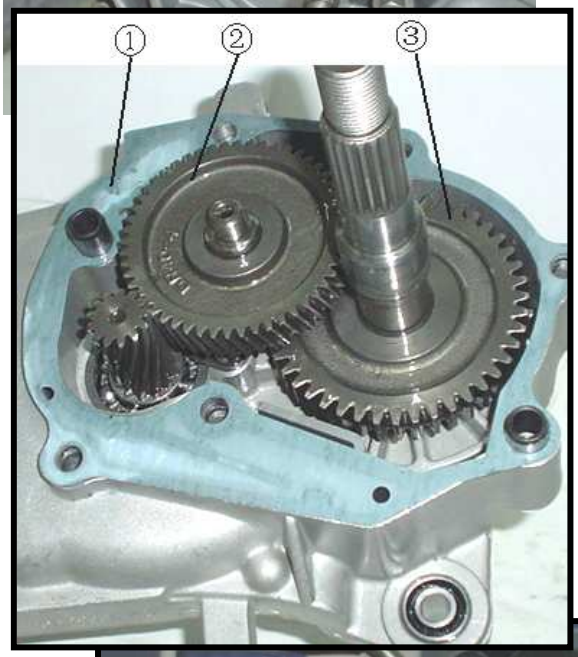

- Remove paper gasket ① and middle gear assy.②
- Remove output gear assy. ③

- Remove carburetor

- **Remove intake pipe**

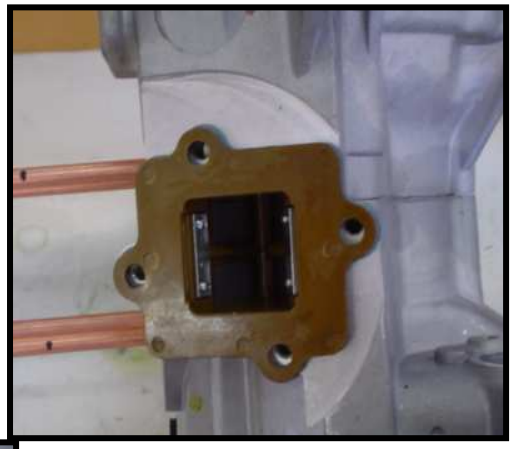

- **Remove reed valve and paper gasket.**

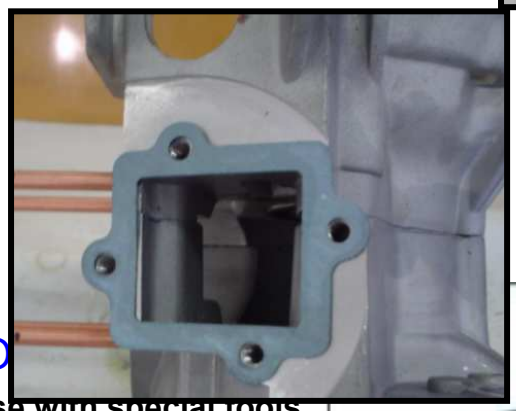

- **Disassemble crankcase with special tools**

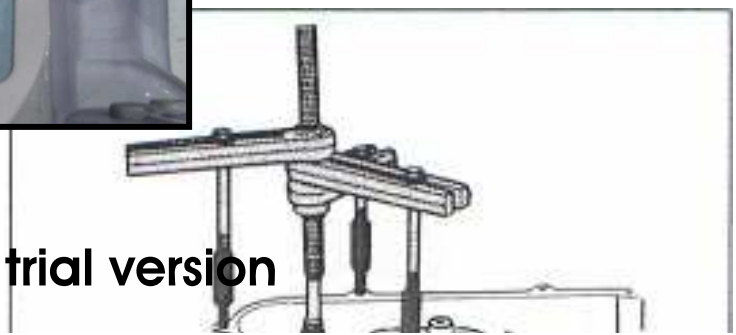

- **Remove crankcase with special tools**

- **Remove crank shaft from crankcase.**

- **Remove crankshaft bearing with special tools.**

- Loosen the clutch shoe nut with the special tool.

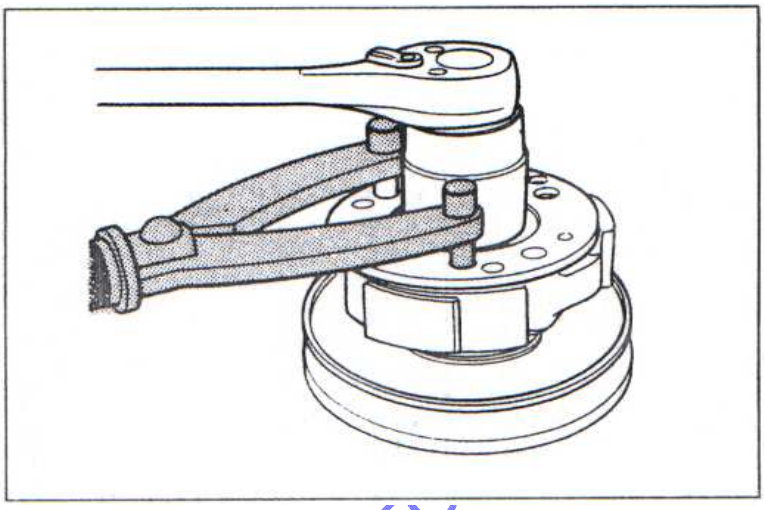

- Remove the nut while holding down clutch shoe assy.
  By both hands as shown in the illustration.

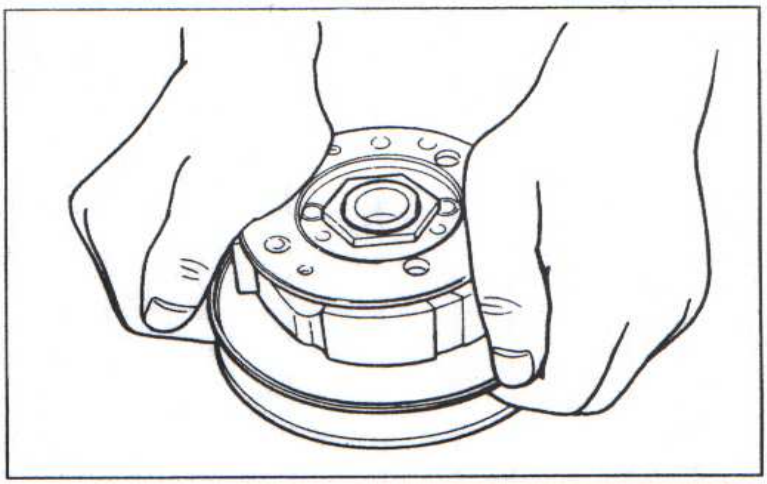

WARNING

Gradually back off the clutch shoe assy.
pressed down by hands to reduce the clutch sparing load. Releasing the hand suddenly may cause the following parts to fly apart.

- Clutch shoe nut ①
- Clutch shoe assembly ②
- Spring ③

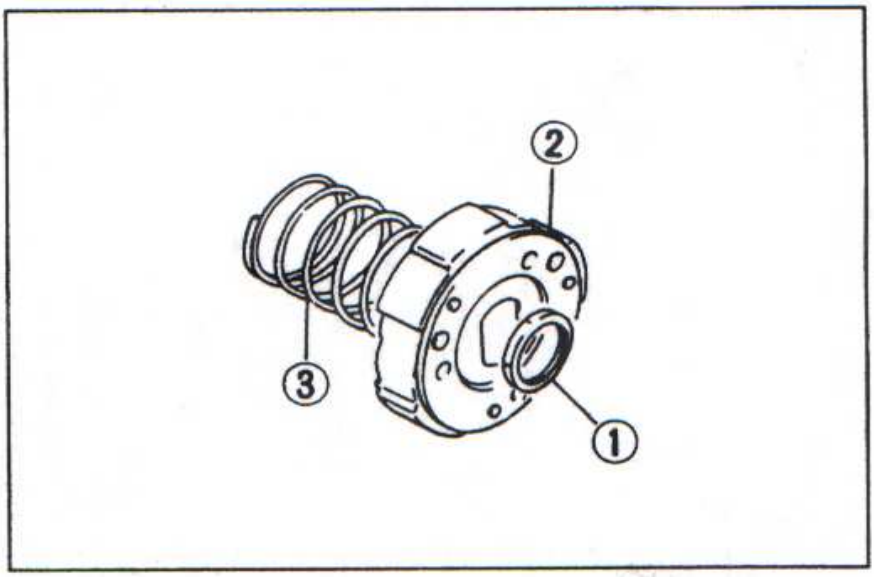

CAUTION

Do not attempt to disassemble the clutch shoe assy. Otherwise the clutch shoe may be damaged.

- Remove the movable driven face seat with a thin bared screwdriver.

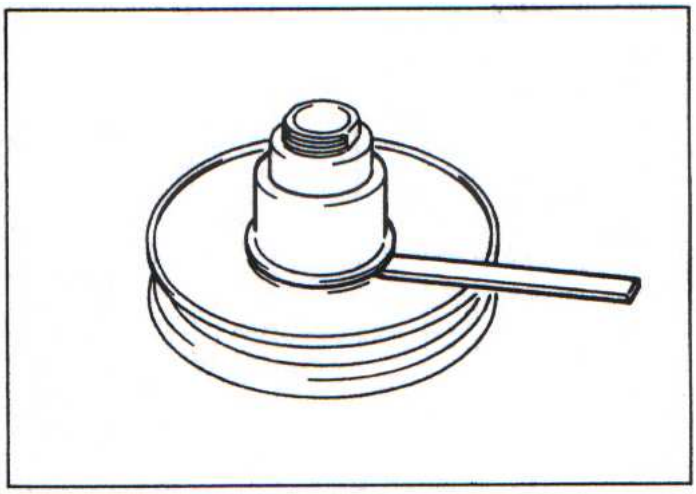

- Remove the pins ④, movable driven face ⑤ and fixed driven face ⑥.

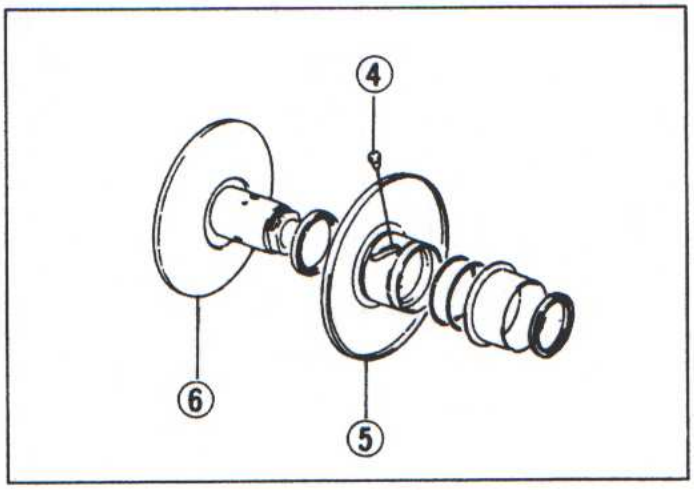

- Remove circlip ①
- Remove bearing with special tool.

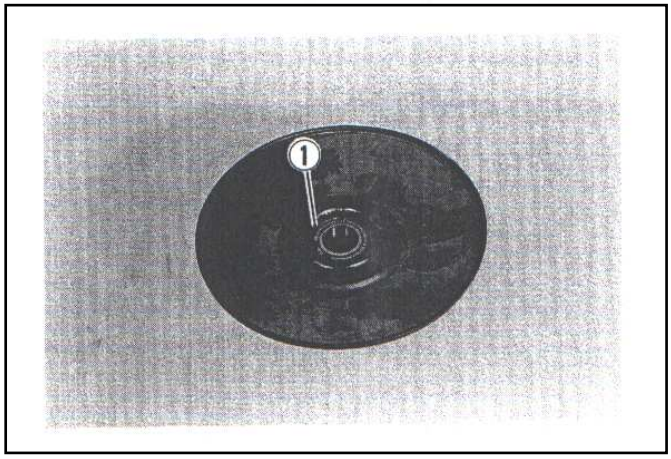

- Remove bearing with special tool.

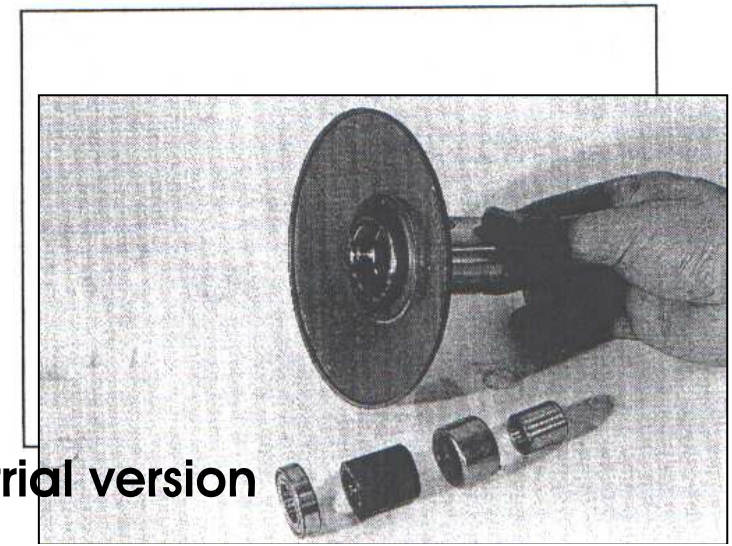

CAUTION

Replace the removed bearing with a new

one.

- Remove the spacer

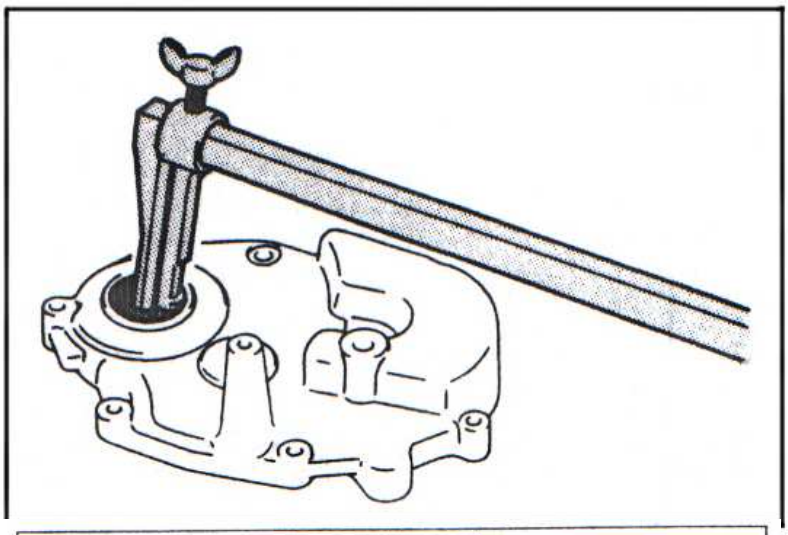

- Remove the oil seal from the gear case cover with the special tool.

CAUTION

- Replace the removed oil seal with a new one.

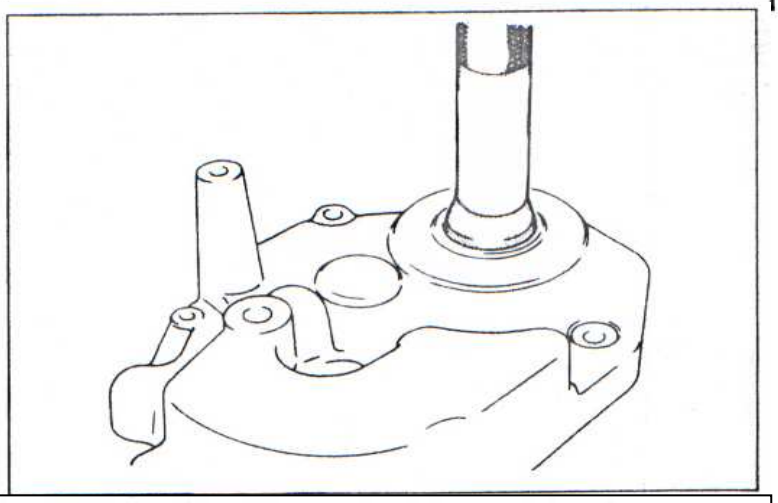

- Remove the bearing with special tool.

CAUTION

Replace the removed bearing with a new one.

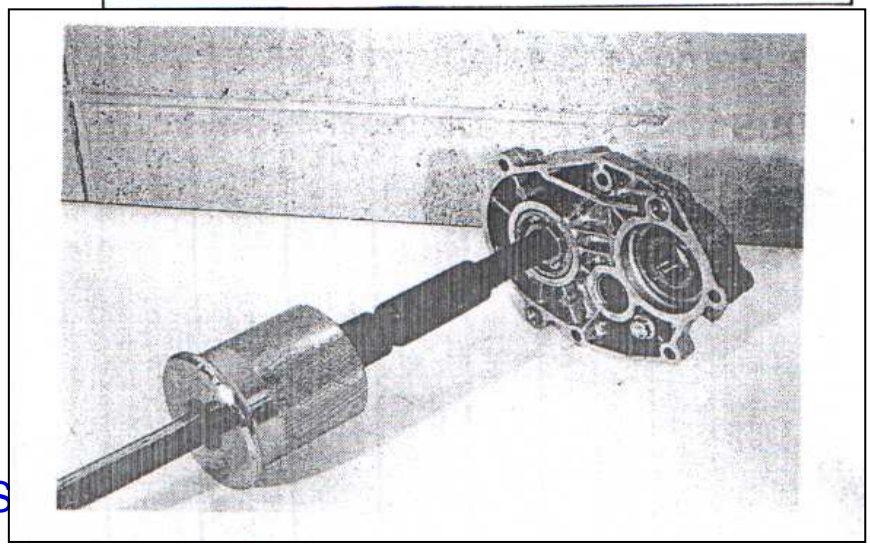

- Removing the bearings with special tools.

- Remove the bearing retainer.

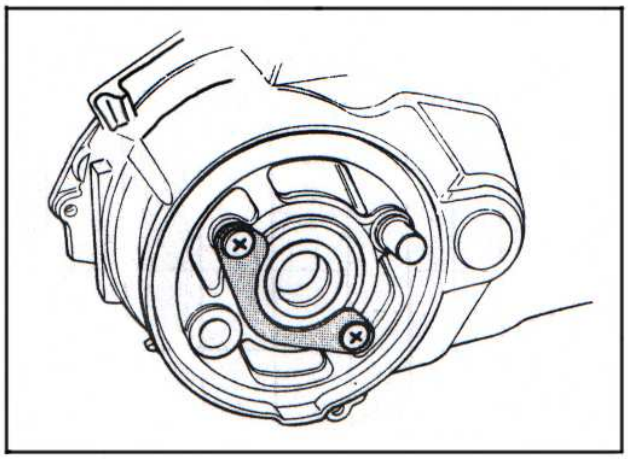

- Remove oil seal with the special tools.

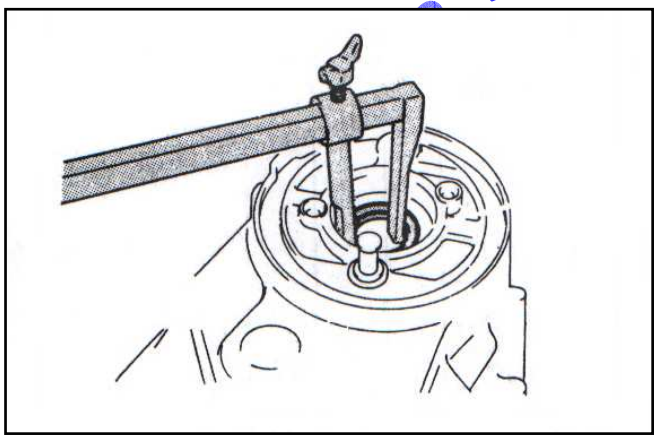

CAUTION
Replace the removed oil seal with a new one.

- Remove the bearing with special tool.

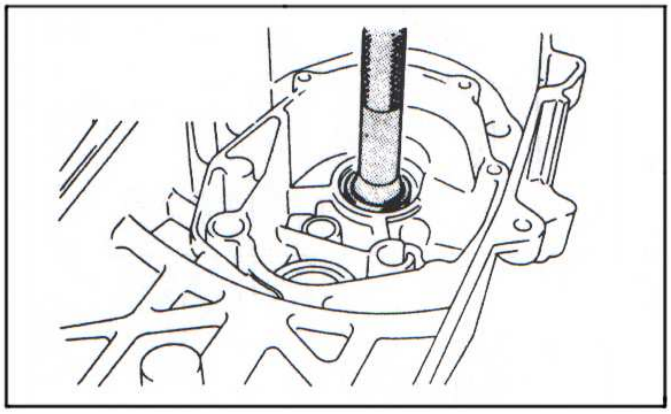

CAUTION
Replace removed bearing with a new one.

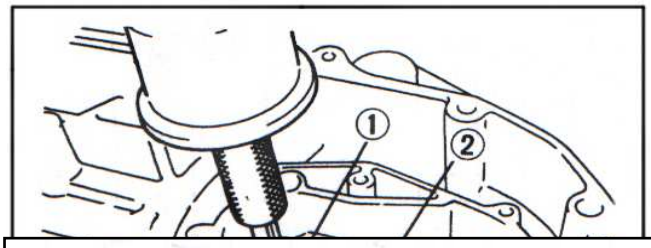

- Remove the drive shaft bearing ① and idle shaft bearing ②.

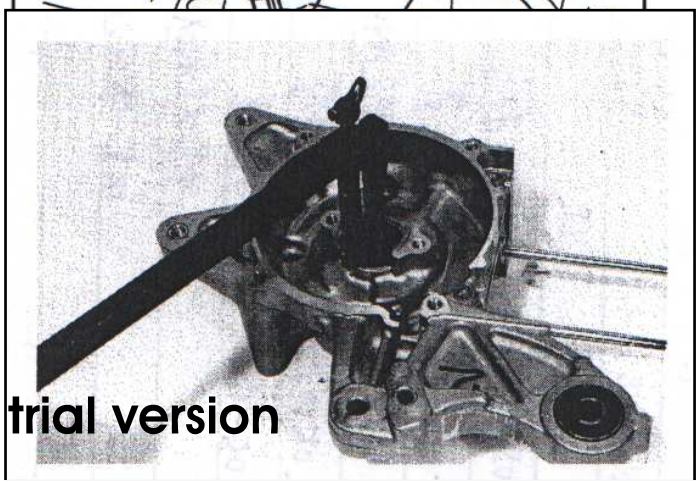

CAUTION:
The removed bearings should be replaced with new ones.

- Remove the right crankshaft oil seal with special tool.

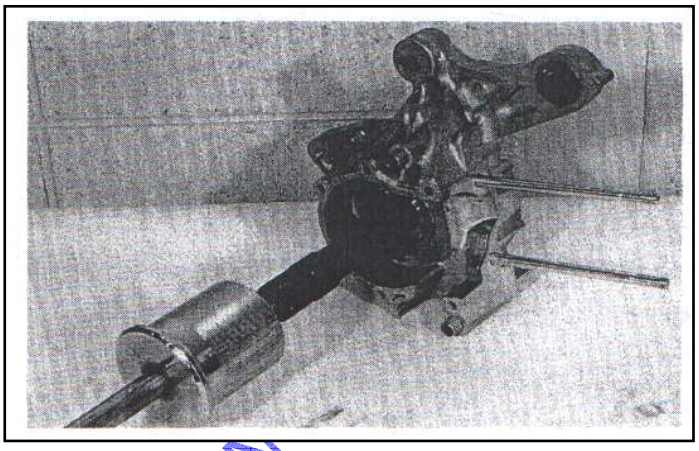

CAUTION
The removed oil seal should be replaced with a new one.

- Remove the the right crankshaft bearing with the special tool.

CAUTION
The removed bearing should be replace with a new one.

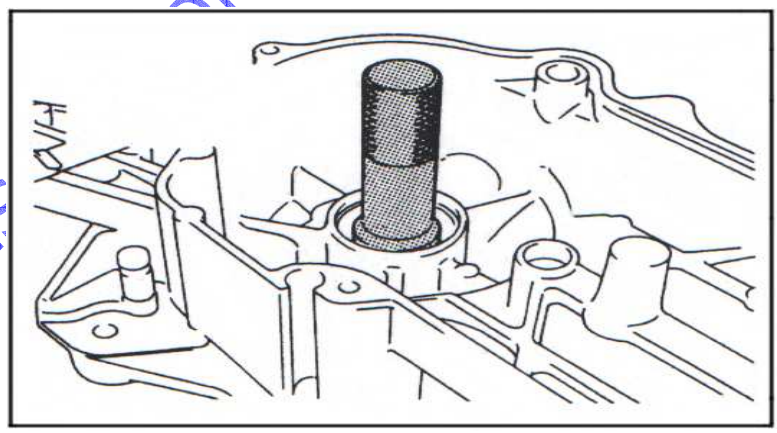

- Remove the left crankshaft bearing with special tool.

CAUTION
The removed bearing should be replaced with a new one.

BUSHING INSPECTION:
Inspect the bushing for wear or damage.
If any defects are found, replace the bushing
With a new one.

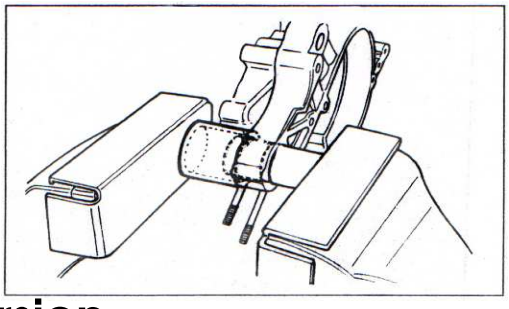

CRANKCASE BUSHING DISASSEMBLY

- Use two steel tubes of appropriate size to press

the engine mounting bushings on a vise as shown in the illustrations.

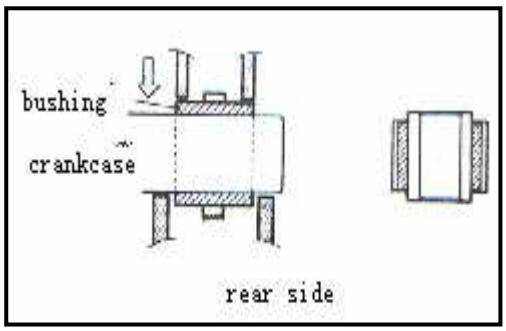

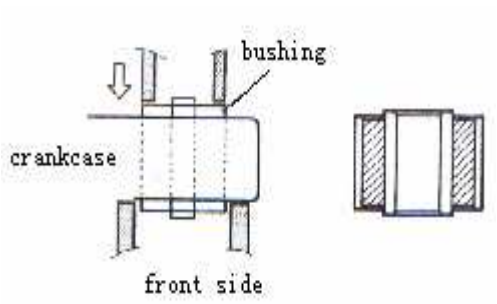

ENGINE COMPONENTS INSPECTION AND SERVICING

BEARING:

Clear bearing with solvent and lubricate with engine oil before inspection.
Rotate the bearing inner race by finger to inspect for abnormal play, noise and smooth rotation while the bearings are in the crankcase. Replace the bearing if there is anything unusual.

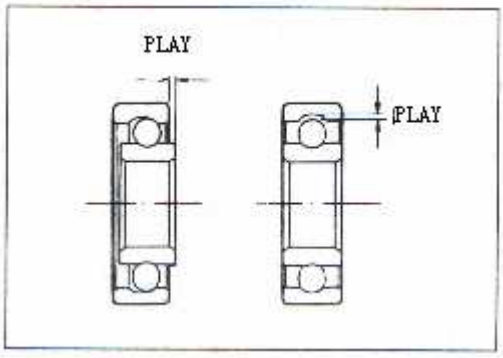

OIL SEAL:

Damage to the lip of the oil seal may result in leakage of the fuel-air mixture or oil. Inspect for damage and be sure to replace the damaged seal if found.

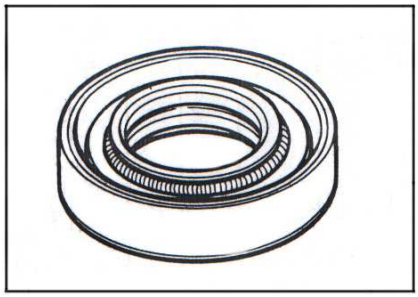

CRANKSHAFT:

CRANKSHAFT RUN OUT:

Support the crankshaft with"V" blocks as shown, with the two end journals resting on the blocks.
Position the dial gauge, as shown, and rotate the crankshaft to read the run out as shown.
Correct or replace the crankshaft if the run out is greater than the specified limit.

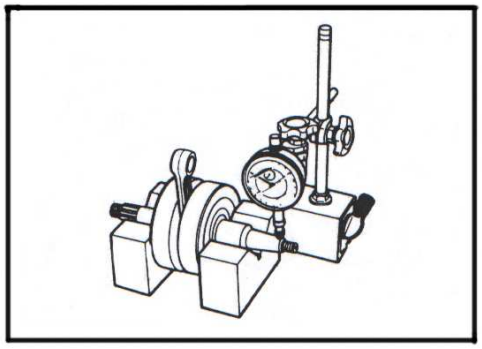

Service limit□0.05mm (0.002in)

Excessive crankshaft run out is often responsible for abnormal engine vibration. Such vibration reduces the engine life.

CONROD DEFLECTION AND CONROD BIG END SIDE CLEARANCE:

Turn the crankshaft with the connecting rod to feel the smoothness of rotary motion in the big end. Move the rod up and down while holding the crankshaft rigidly to be sure that there is no rattle in the big end.
Wear on the big end of the connecting rod can be estimated by checking the movement of the small end of the con rod. The method can also check the extent of wear on the parts of the connecting rod's big end. If wear exceeds the limit, replace connecting rod, crank pin and crank pin bearing.

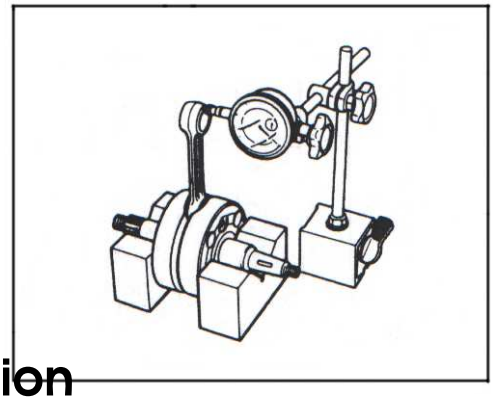

Service limit□3.0mm(0.12in)

Instruments:

1. **Dial gauge (1/100 mm)**
2. **V Block and**
3. **Thickness gauge**

Push the big end of the conrod to one side and measure the side clearance with the thickness gauge.

Standard: 0.10~0.45 mm (0.004~0.018 In)

Service Limit: 1.00mm (0.039 In)

CONNECTING ROD SMALL END I.D. :

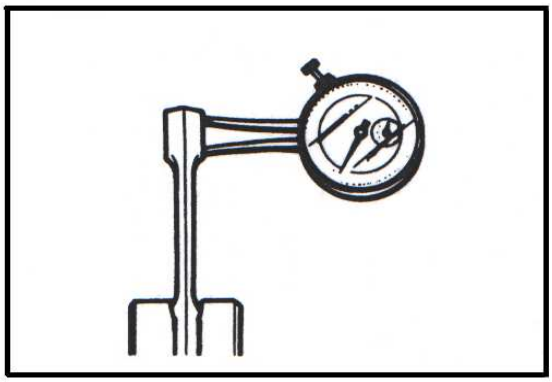

Measure the connecting rod small end diameter with a caliper gauge.

Service limit□14.040mm

CLUTCH SHOE INSPECTION:

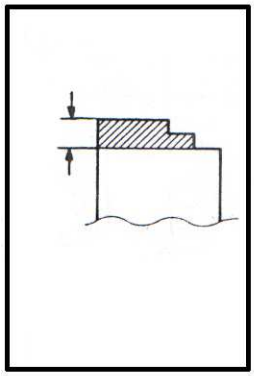

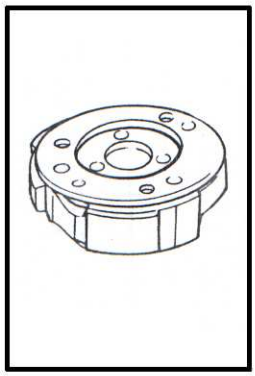

If the engine RPM doesn't coincide with the specified RPM range, then disassemble and inspect the clutch.

Clutch shoe:

Inspect the shoes visually for chips, cracking, uneven wear and burning, and check the thickness of the shoes with venire calipers. If the thickness is less than the following service limit, replace the complete assembly as a set.

Service limit:□2.0mm (0.08 In)

CLUTCH HOUSING INSPECTION:

Clutch springs:

Visually inspect the clutch springs for stretched coils or broken spring coils.

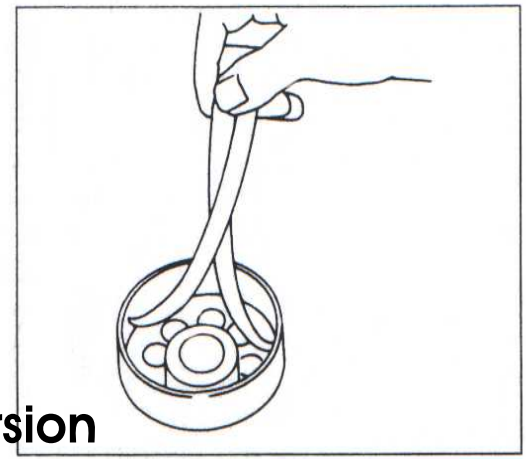

CAUTION□

Clutch shoes or springs must be changed as a set and never separately.

CLUTCH HOUSING INSPECTION:

Inspect visually the condition of the inner surface of

clutch housing, for deep scratches or uneven wear or discoloration caused by burning. Measure the clutch housing inside diameter with inside calipers. Measure the diameter at several points to check for an out-of-round condition as well as wear. If any defects are found or measurement exceeds the specified limit, replace the clutch housing with new one.

Service limit: 110.50mm (4.350in)

DRIVE BELT INSPECTION:

Remove the drive belt and check for cracks, abnormal wear and separation or contamination with oil.
Measure the drive belt width with a venire calipers. Replace it if the belt width is less than the service limit or and defect has been found.

Service limit□16.0mm(0.630in)

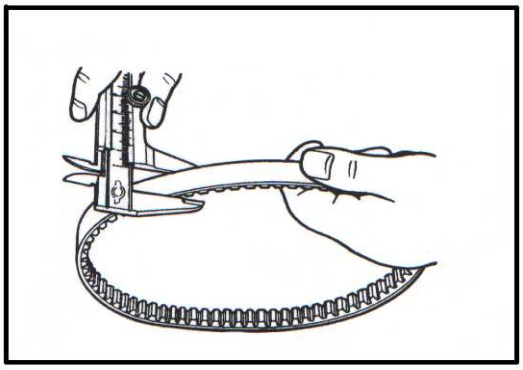

CAUTION:

Always keep the drive belt away from any greasy material.

MOVABLE DRIVE FACE INSPECTION:

Inspect the belt contact surface of the drive face for wear, scratches or any abnormality. if there is something unusual, replace the drive face with a new one.

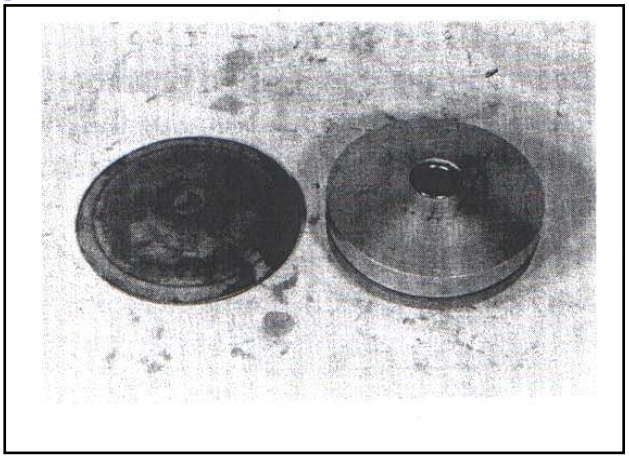

ROLLER AND SLIDING SURFACE INSPECTION:

Inspect each roller and sliding surface for wear or damage. Measure the diameter of roller with a venire calipers. If any defects are found or measurement exceeds the specified limit, replace the roller as a complete set.

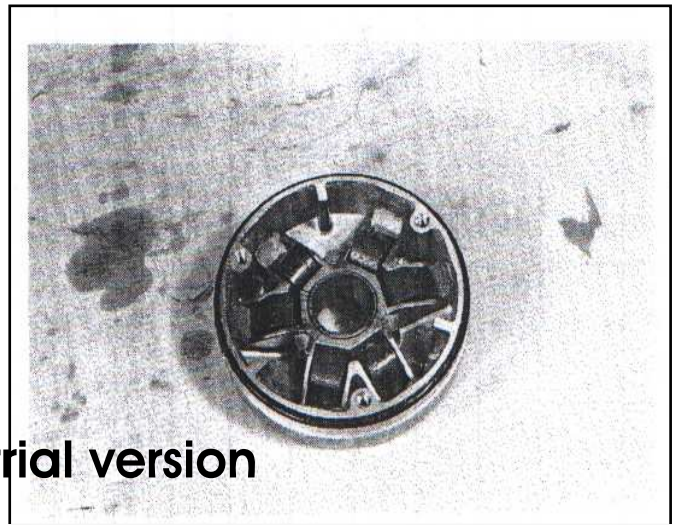

DRIVING FACE SPRING INSPECTION:

Measure the free distance of the driven face spring. If the length is shorter than the service limit, replace the spring with a new one.

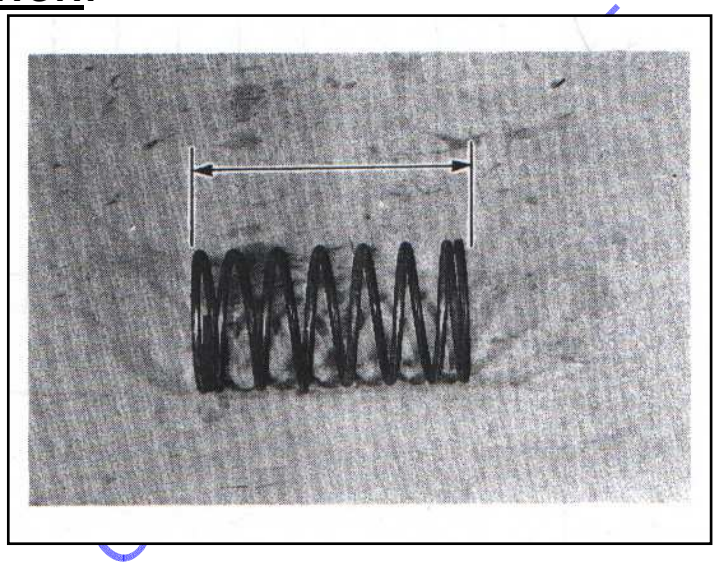

Service limit: 104.5mm (4.11 In)

Driven face pin and oil seal inspection:

Turn the driven face and check to see that the driven faces turn smoothly. If any stickiness or hitches are found, visually inspect the lip of oil seal, driven face sliding surface and sliding pins for wear or damage.

Driven face Inspection:

Inspect the belt contacting surface of both driven faces for any scratches, wear and damage. Replace driven face with a new one if there is any abnormality.

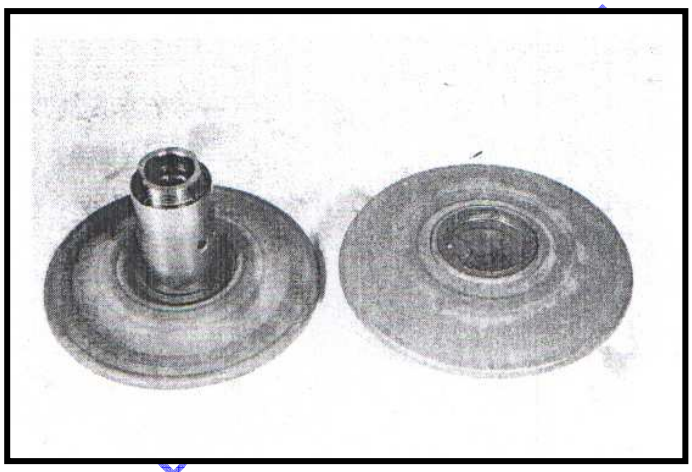

CYLINDER HEAD DISTORTION:

De-carb the combustion chamber. Check the gasket surface of the cylinder head as shown in the illustration for distortion with a straightedge and thickness gauge, taking a clearance reading at several places. If the largest reading at any places of the straightedge exceeds the limit, replace the cylinder head.

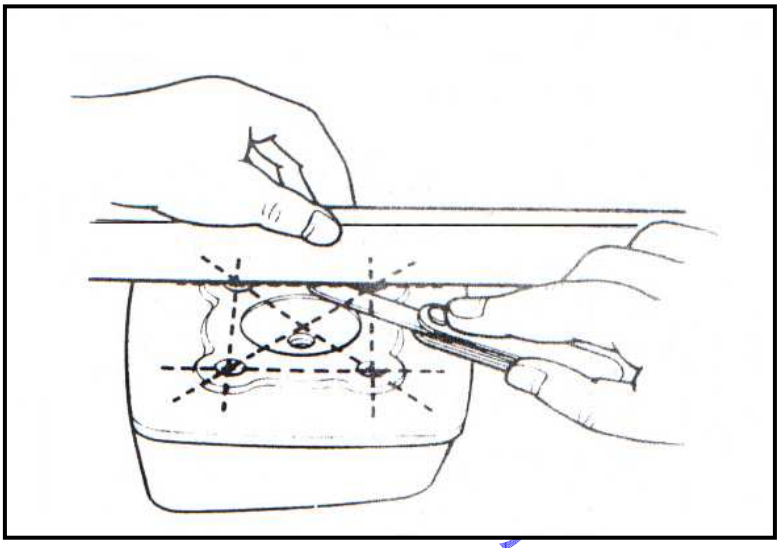

Service limit□0.05mm(0.002in)

If the largest reading at any portion of the straightedge exceeds the limit, rework the surface by rubbing it against emery paper laid flat on the surface plate in a lapping manner. The surface must be smooth and perfectly flat in order to secure a tight join a leaky joint can be the cause of reduced power output and increased fuel consumption.

CYLINDER:

Dearborn exhaust port and upper part of the cylinder, taking care not to damage the cylinder wall surface. The wear of the cylinder wall is determined from diameter reading taken at 20mm from the top of the cylinder with a cylinder gauge. If the wear thus determined exceeds the limit indicated below, rework the bore to the next oversize by using a boring machine or replace the cylinder with a new one. Oversize pistons are *available in two sizes: 0.5mm and 1.0mm.*

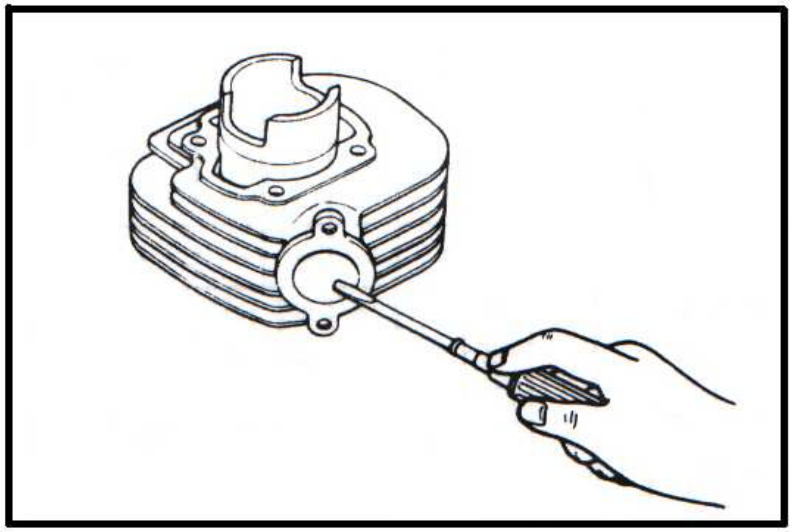

Service limit□40.075mm (1.5778 In)

Measuring Instrument: Cylinder Bore gauge

After reworking the bore to an oversize, be sure to chamfer the edges of ports and smooth the chamfered edges with emery paper. To chamfer, use a scraper, taking care not to nick the wall surface.

NOTE

Minor surface flaws on the cylinder wall due to seizure or similar abnormalities can be corrected by grinding the flaws off with fine-grain emery paper. If the flaws are deep grooves or otherwise persist, the cylinder must be reworked with a boring machine to the next oversize.

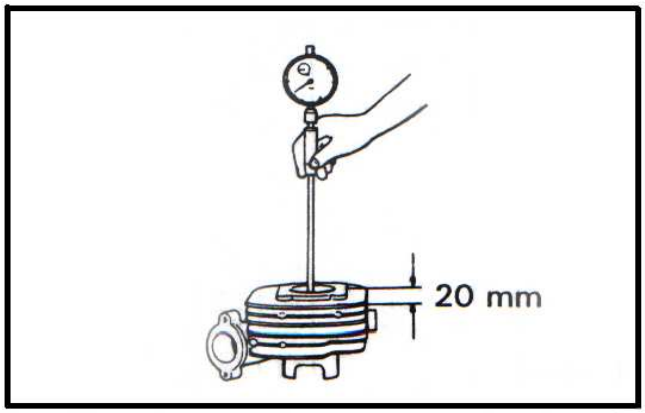

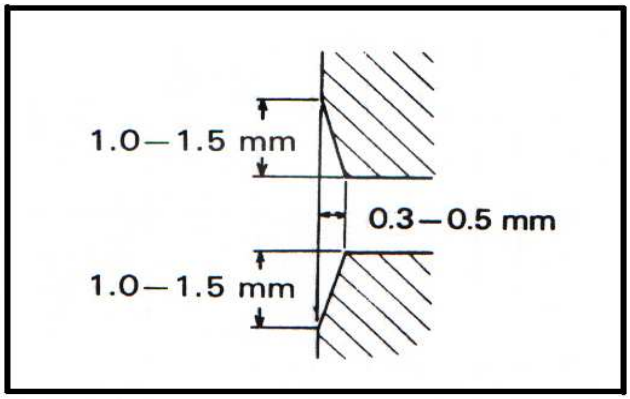

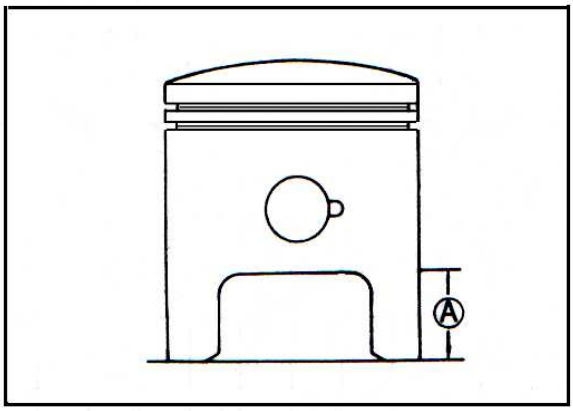

PISTON:

Cylinder and piston clearance:

Cylinder piston clearance is the difference between piston diameter and cylinder bore diameter. Be sure to take the marked diameter at right angles to the piston pin. The value of elevation **A** is prescribed to be 20mm from the skirt end.

Service limit 39.885mm(1.5703In)

Measuring Instrument: Micrometer

As a result of the above measurement, if the piston-to-cylinder clearance exceeds the following limit, overhaul the cylinder and use an oversize piston, replace both cylinder and piston. The measurement for the bore diameter should be taken in the intake-to-exhaust port direction and at 20mm from the cylinder top surface.

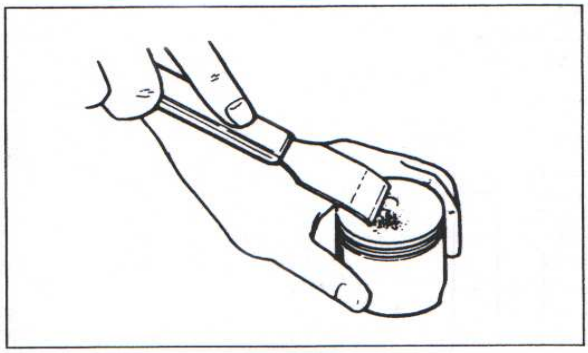

	Standard	Service limit
Cylinder	40.005-40.020 mm	40.075 mm
Piston	39.94-39.955 mm	39.885 mm
Cylinder to piston	0.06-0.07 mm	0.120 mm

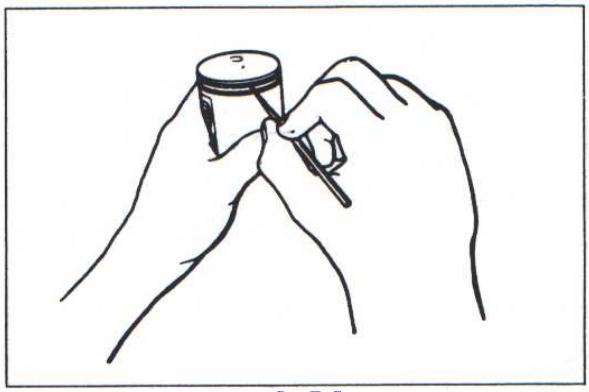

De-carb:

De-carb the piston and piston ring grooves, as illustration. After cleaning the grooves, fit the rings and rotate them in their respective grooves to be sure that they move smoothly. Carbon in groove is liable to cause the piston ring to get stuck in the groove, and the condition will lead to reduce engine power output.

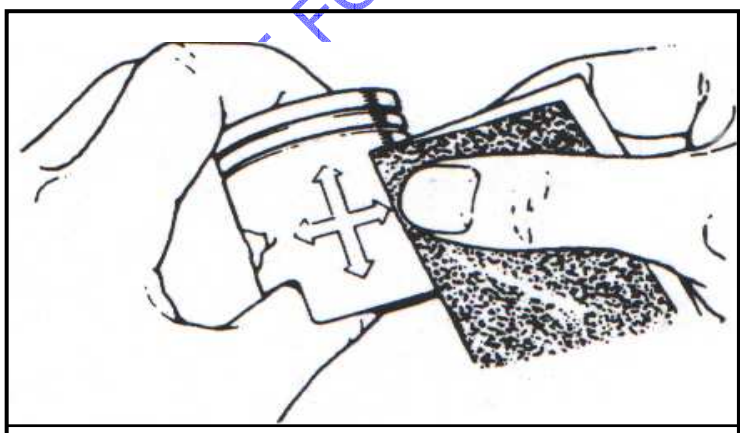

Grind piston surface evenly with emery paper

A piston whose sliding surface is badly grooved or seized due to overheating must be replaced. Shallow grooves or minor scuff can be removed by grinding with emery paper of about #400.

Piston pin bore:

Use a caliper gauge to measure the piston pin bore inside diameter; if reading exceeds the following service limit, replace it with a new one.

Service Limit: 12.30mm(0.48 In)

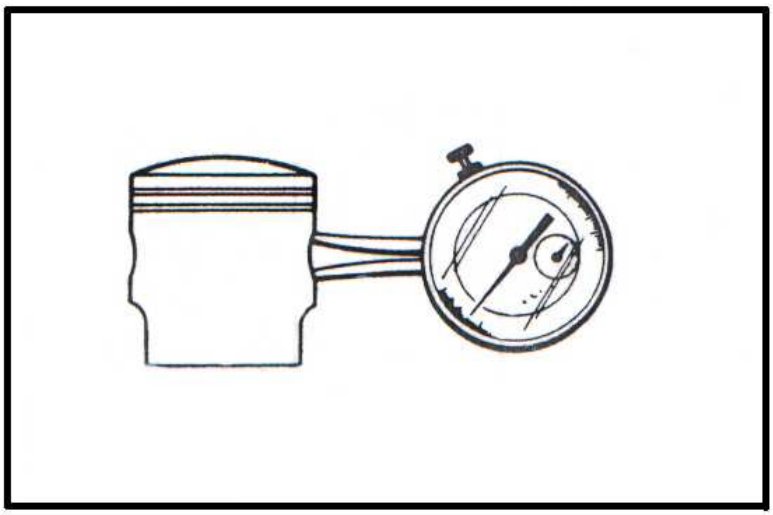

Piston pin outside diameter

Use a micrometer to measure the piston pin outside diameter at three positions.

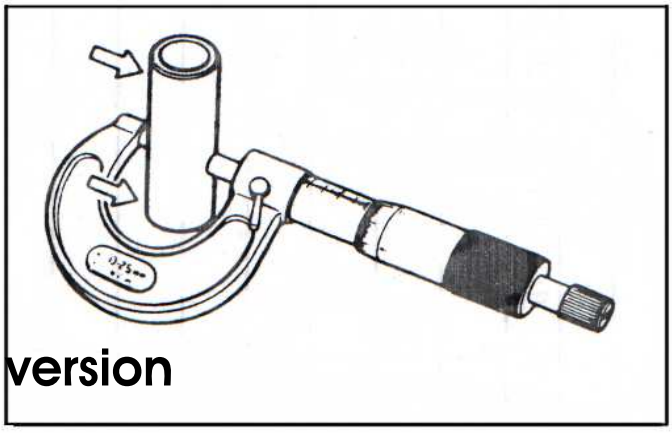

Service limit□11.980mm(0.4717 In)

PISTON RINGS:

Check each ring for end gap, reading the gap with a thickness gauge shown in the illustration. If the end gap is found to exceed the specified limit, indicated below, replace it with a new one.

The end gap of each ring is to be measured with the ring fitted squarely into the cylinder bore and held at the least worn part near the cylinder bottom, as shown in the illustration.

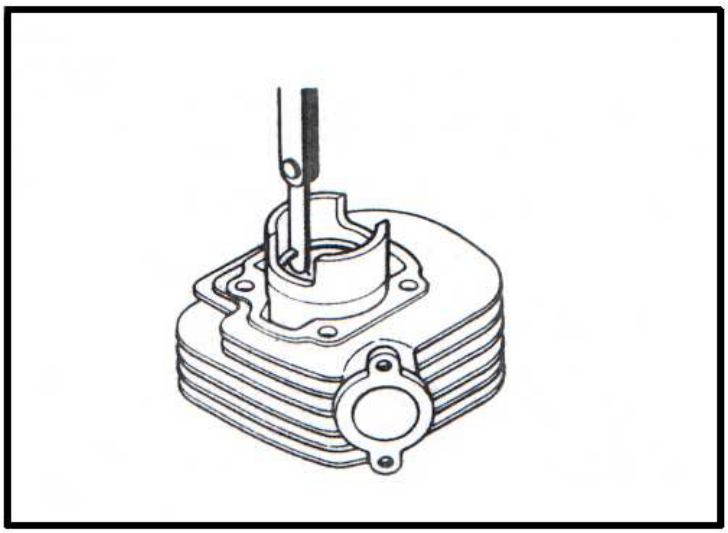

Service limit□0.75mm(0.0296 In)

As the piston ring wears, its end gap increases reducing engine power output because of the resultant blow by through the enlarged gap. Here lies the importance of using piston rings with end gaps with the limit. Measure the piston ring free end gap to check the spring tension.

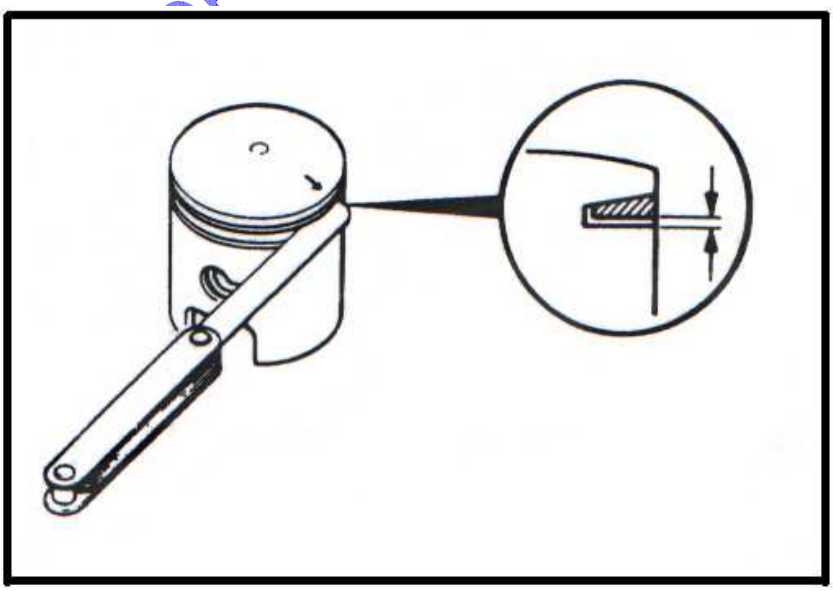

Service limit□3.6mm(0.142In)

Fix the piston ring in the piston ring groove, measure the ringside clearance with the thickness gauge while matching the sliding surface of piston and ring.

Standard clearance:

1st□0.04-0.06mm(0.0016-0.0024in)
2nd□0.02-0.04mm(0.0008-0.0016in)

Reed Valve:

Check the clearance **A** between reed valve and its seat and the dimension **B**.
If the clearance **A** is noted to exceed 0.2mm, replace the reed valve assembly.
The dimension **B** is at least 1mm.

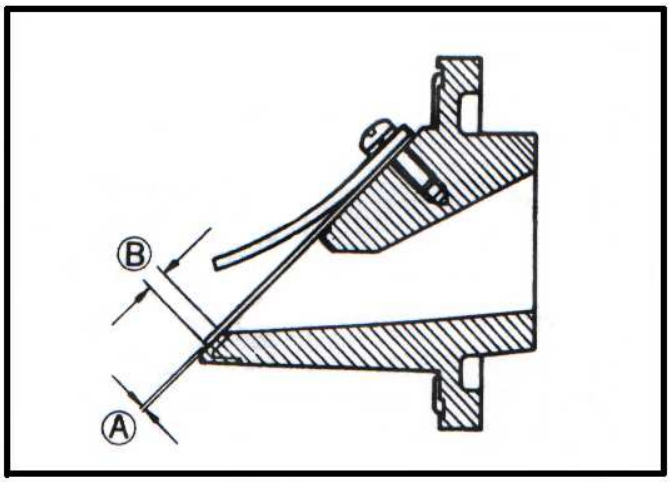

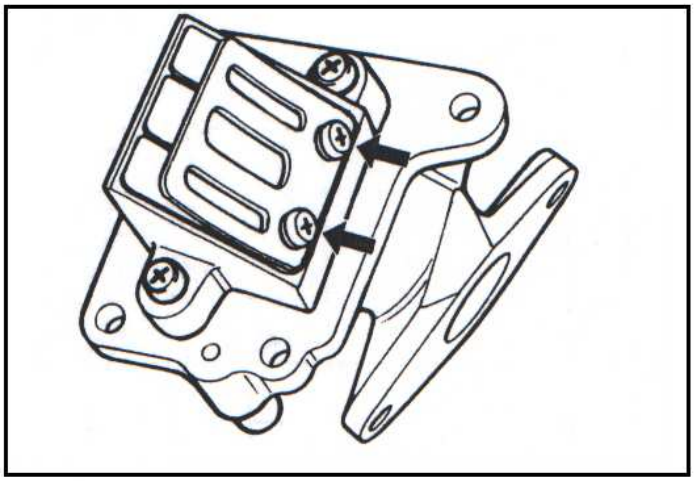

ENGINE REASSEMBLY:

Reassembly is generally performed in the reverse order of disassembly, but there are a number of reassembly steps that demand detailed explanation. These steps will be taken up for respective parts and components.

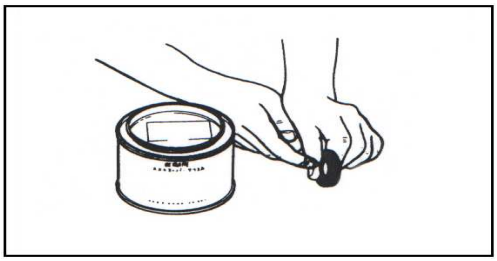

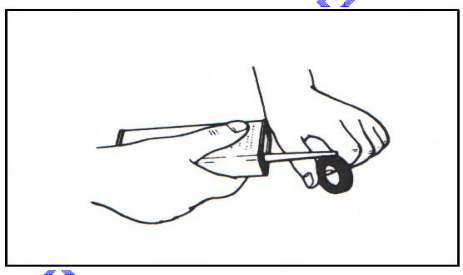

Oil seals:

Fit the oil seals into the crankcase following the procedure below. Replace, removed oil seals with new ones.

- Apply special multipurpose grease to the lip of the oil seals.
- Be sure to apply THREAD LOCK "1342" to outer surfaces of right and left crankshaft oil seals to prevent them from moving.

- When fitting the oil seal into the crankcase, insert it slowly with the special tools.

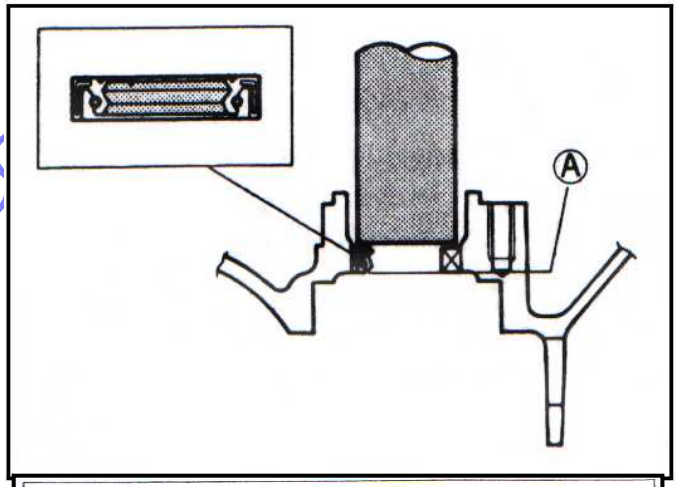

NOTE:

Align the oil seal with edge A of the crankcase as shown in the illustration.

BEARINGS:

Install the new bearings with a set of the special tools.

Install the new bearing and oil seals into the crank case cover with

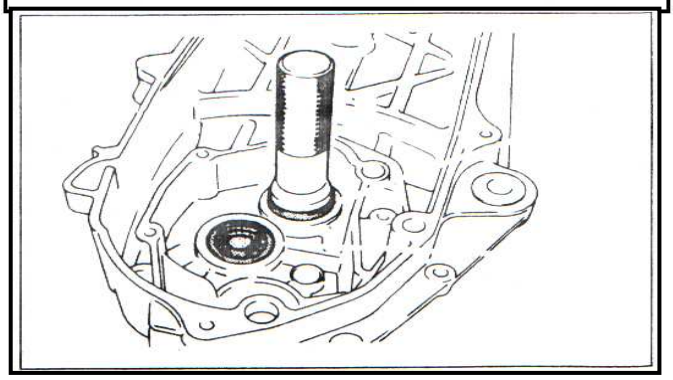

ENGINE MOUNTING BEARING PRESSING:

Using two steel tubes of appropriate size and a vise, press the mounting bushings ①and ②□into the crankcase holes as shown in the illustration.

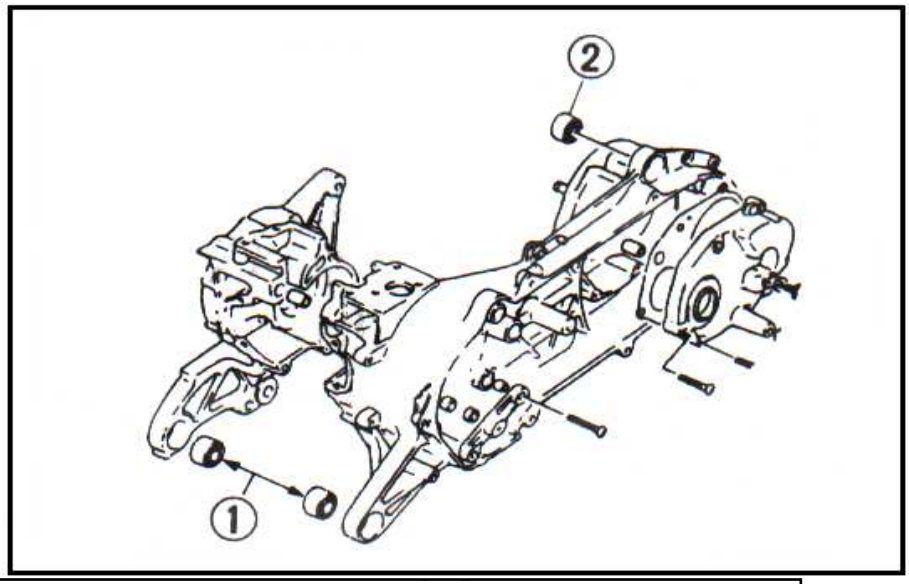

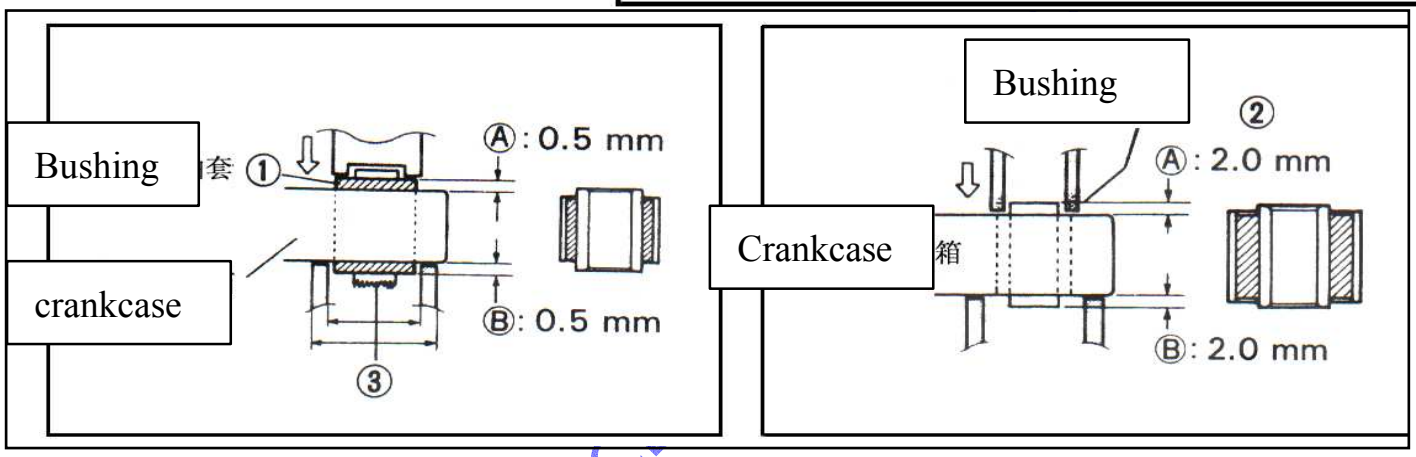

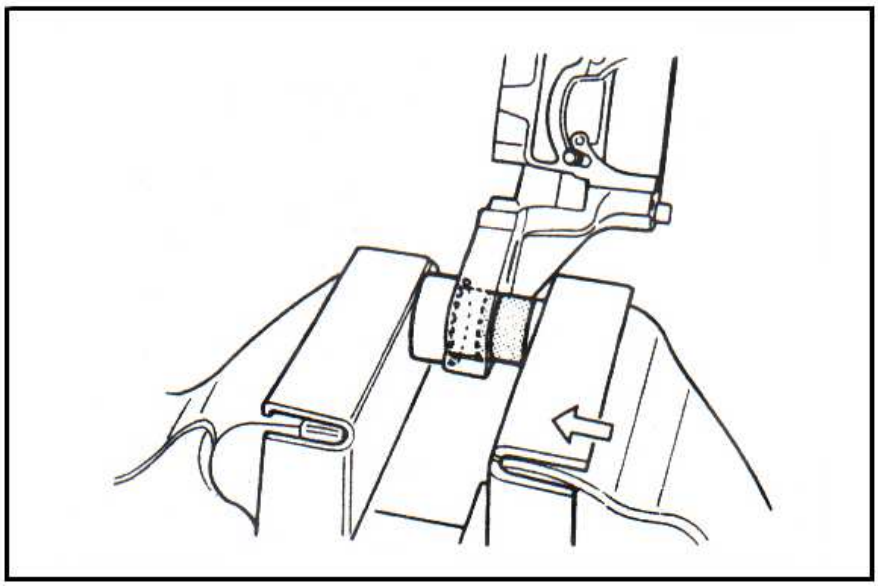

CRANK SHAFT

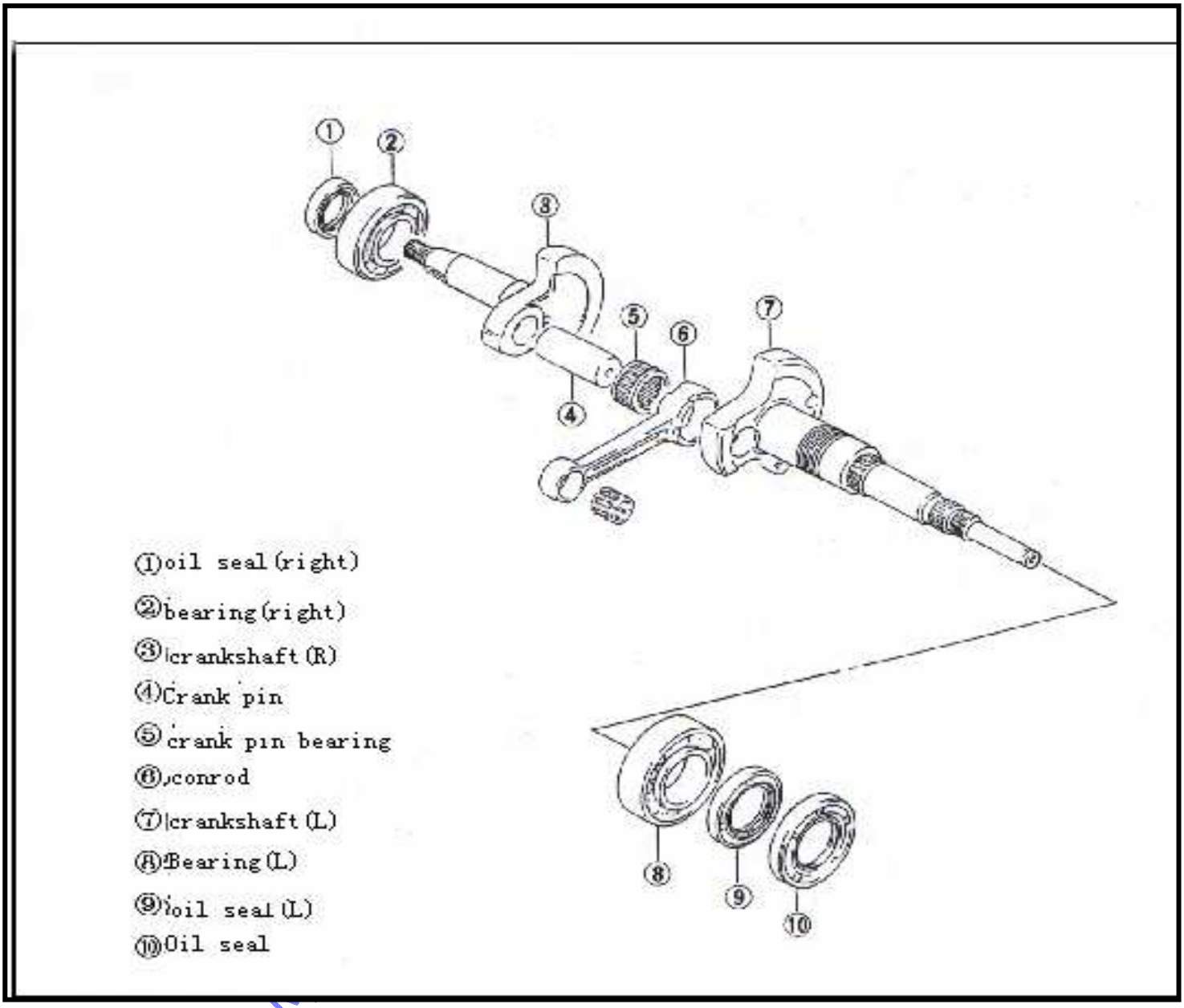

- Decide the length between the webs refer the figure at right when assembling the crankshaft.

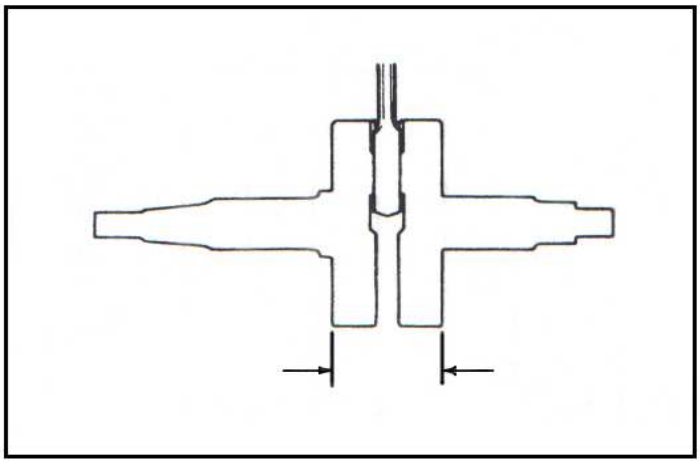

Standard width between webs:

38±0.1mm(1.496±0.004in)

- When mounting the crankshaft into

crankcase, it is necessary to pull its left end into the crankcase with the special tool.

CAUTION:

Never fit the crankshaft into the the crankcase by driving it with a plastic hammer. Always use the special tool, otherwise crankshaft alignment accuracy will be affected.

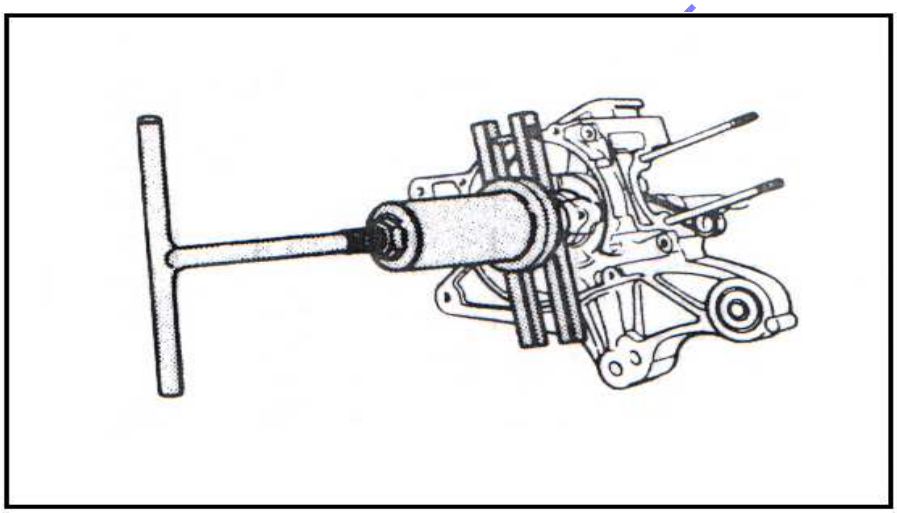

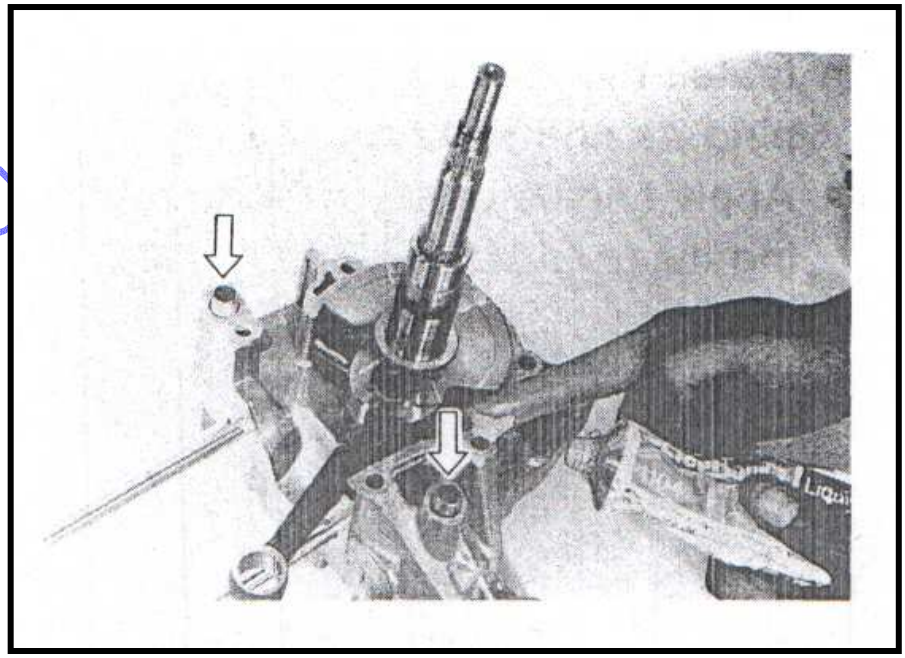

CRANKCASE

- Wipe the crankcase mating surfaces with cleaning solvent.
- Apply specified liquid gasket evenly to the mating surface of the left half of the crankcase, and install the dowel pins.
- Install the two dowel pins
- Tighten the crankcase bolts securely with torque wrench at specified torque.

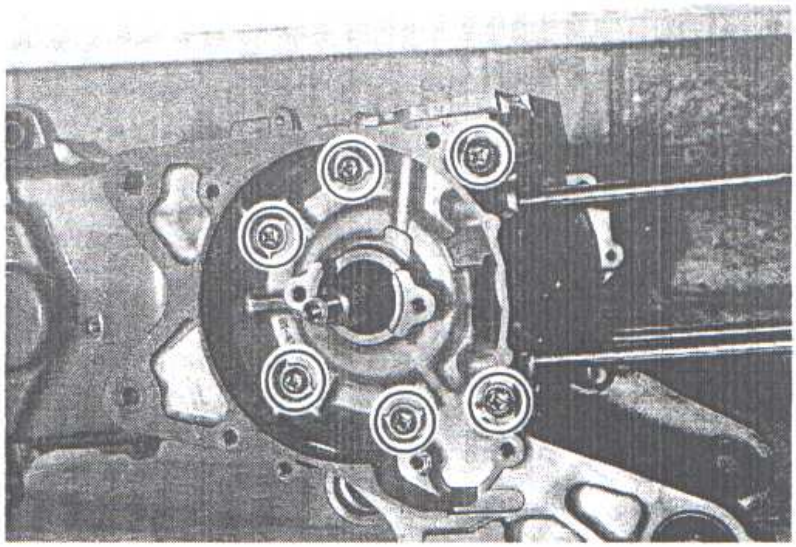

Torque:12 Nm (1.2 Kgm)

- Check crankshaft rotation should be smooth.
  - Install the rear axle shaft ①1into the crankcase by tapping its end lightly.
  - Apply engine oil on the left end of the rear axle shaft being inserted later in the reduction gear box cover.

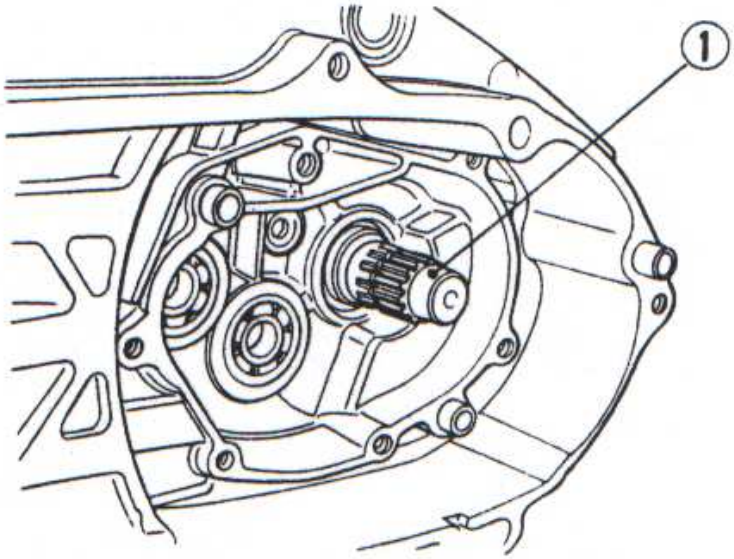

- Apply grease lightly on the rear brake cam pivot part and install it to the

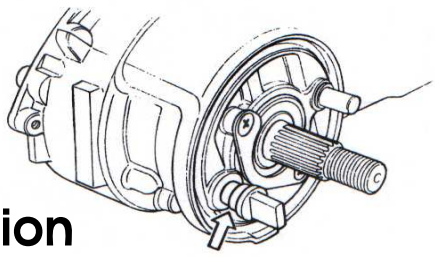

crankcase.

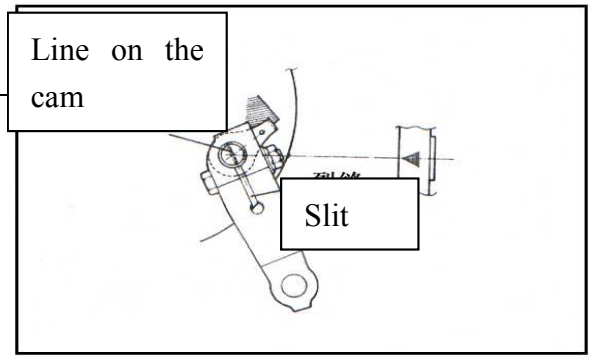

- Turn to position the cam where the punched mark Ⓐ on the end face is directed toward the axis of the rear axle shaft.

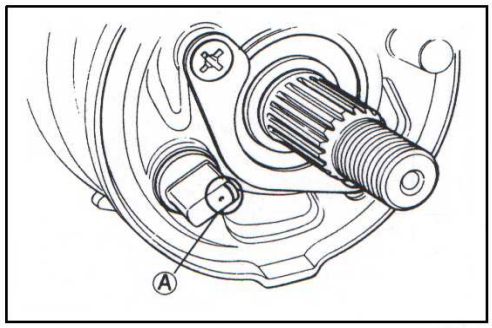

- Aligning the tang on the wear indicator plate with a cutaway on the rear brake cam serrated end; slide the indicator plate over the cam serration.

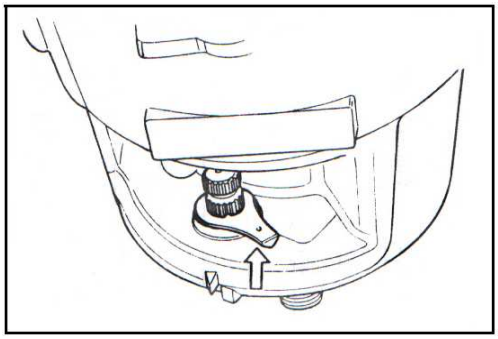

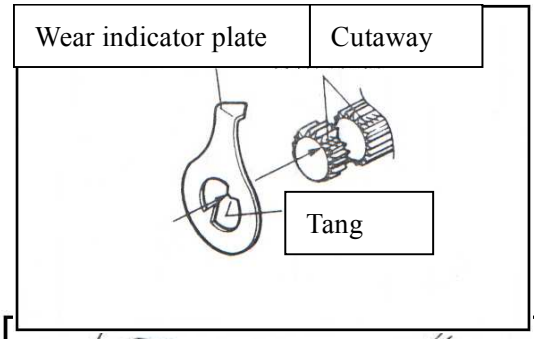

- When installing the cam lever to the cam, align the line on the cam with the slit of cam lever.

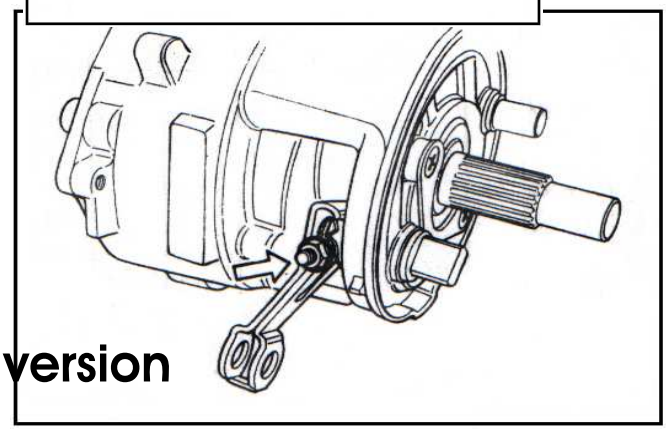

- Tighten the cam lever nut to the specified torque.

Tightening Torque

6~8N.m(0.6~0.8kgm)

- Install the brake shoes.
- Install the rear wheel

TRANSMISSION

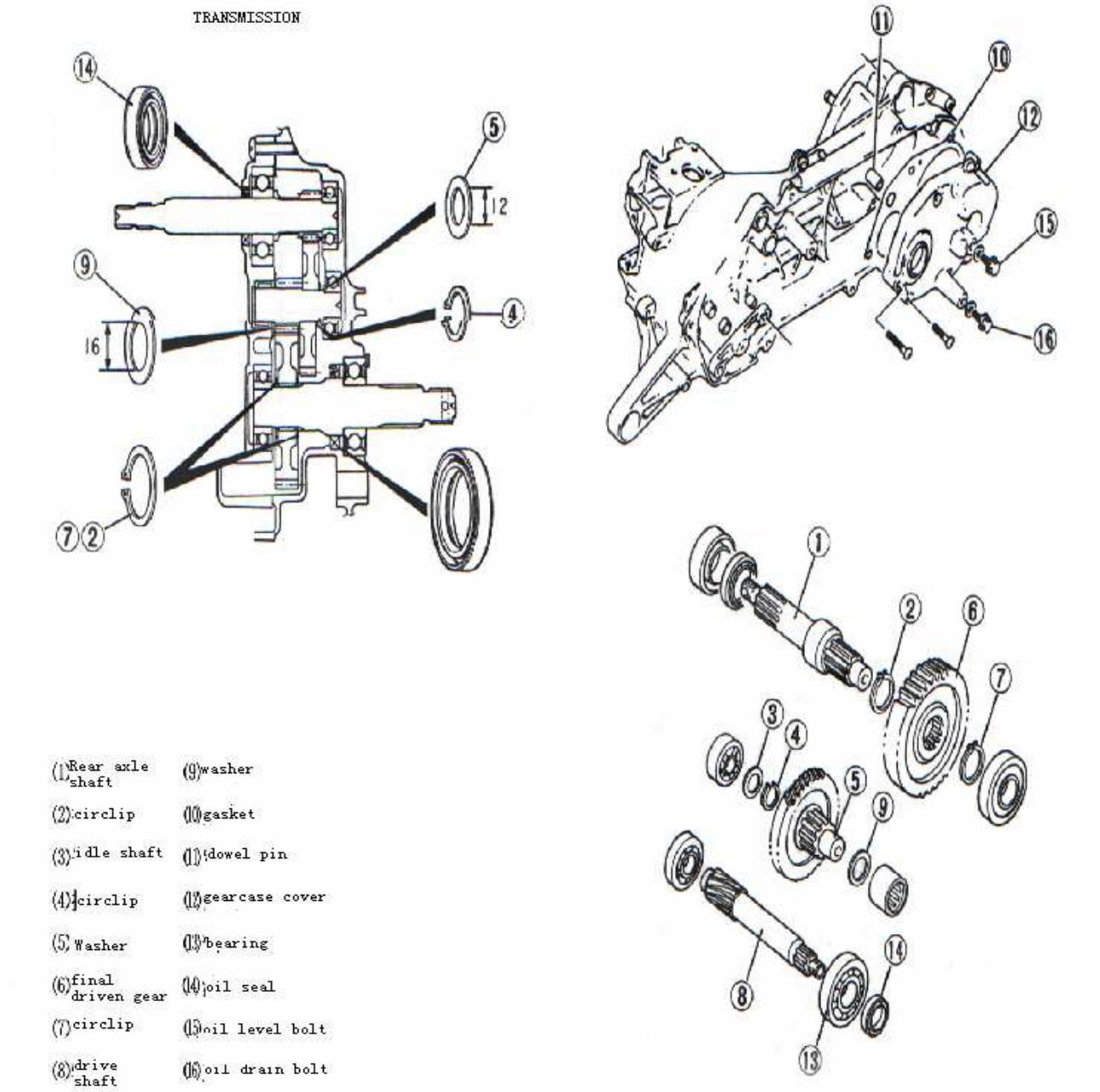

NOTE:

When using a new circlip, pay attention to the direction of the cir-clip between its two faces; one with sharp corners and the other with rounded corners. When installing, determine the direction of thrust being applied and position the cir-clip so that it supports the thrust with it sharp corner securely pressing the shaft groove as shown in the illustration.

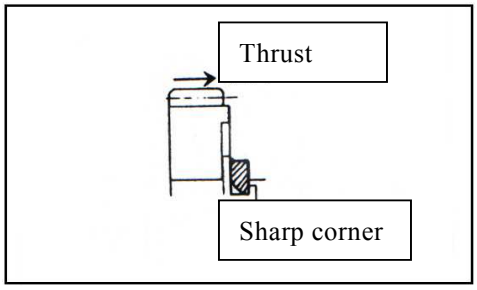

- Assemble the idle shaft subassembly using the idle shaft ①, cir-clip ③ and thrust washer ②, and then install the subassembly on the gear case.

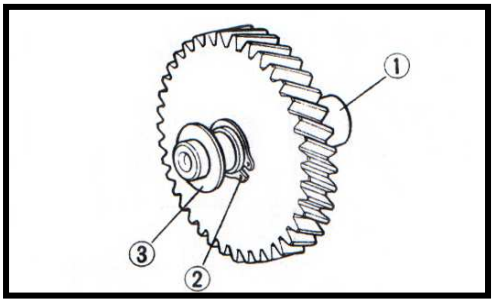

- Install the final driven gear ⑤ on the rear axle shaft using the cir-clip ④.

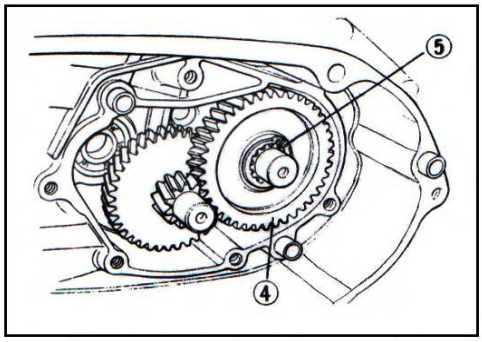

- Install washer ⑧, new gasket ⑦ and dowel pin ⑥.
- Install the drive shaft ⑧ to the gear case cover.
- Install the retainer ⑨

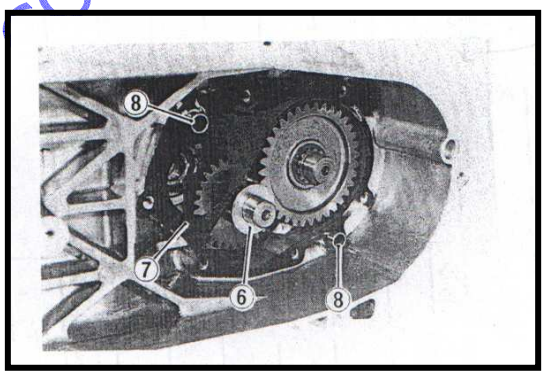

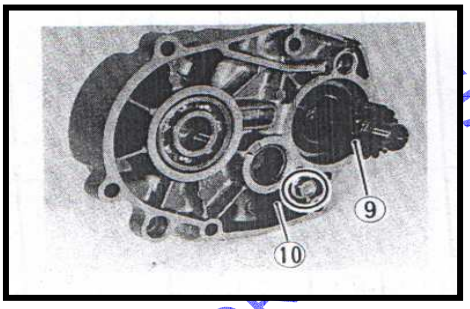

- Tighten gearbox cover ① to the specified torque.
- Tighten the oil drain bolt ②

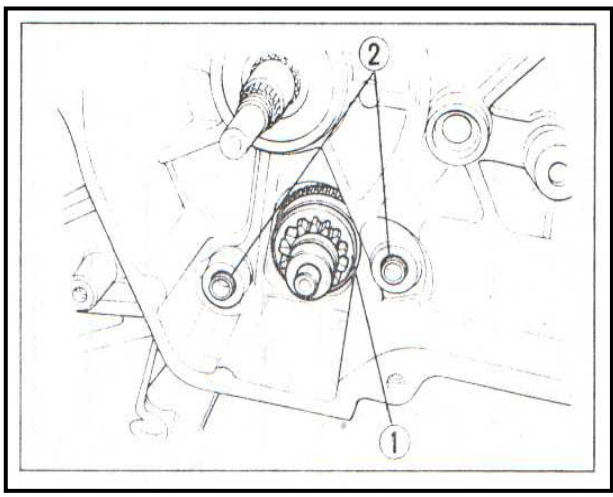

Tightening Torque

10~12 N.m(1.0~1.2Kgm)

- Fill the gearbox with engine oil up to the oil level hole.

Oil Capacity:100ml (SAE 85W/40)

Starter pinion and starter gear:

- Apply grease on the pinion shaft and install the starter pinion subassembly.

- Assemble the starter pinion subassembly ③.

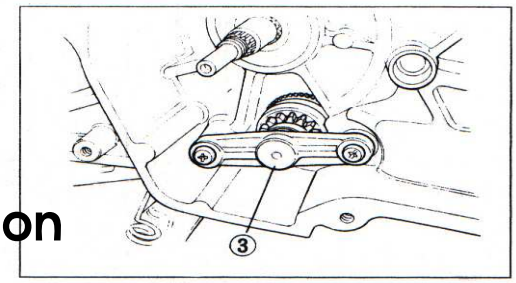

- Insert the two dowel pins bushing ○ on the crankcase and install the starter idle gear cap ○.

- Install the starter gear ○ over the left crankshaft end.

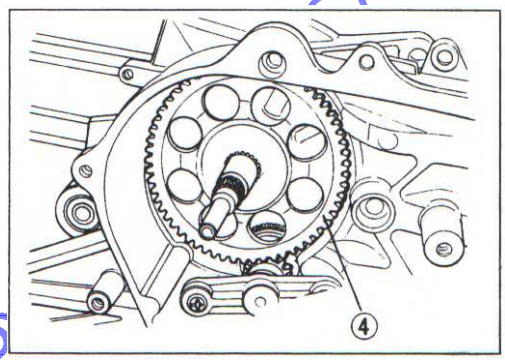

- Install the new O-RING ○.

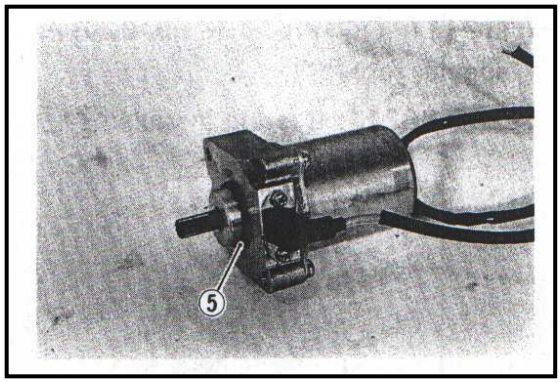

- Install the starter motor ○. When tightening the attachment screws, secure the clamp together with the upper front screw.

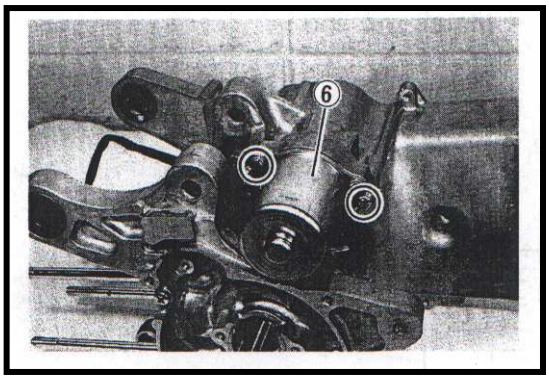

MOVABLE DRIVEN AND CLUTCH

Movable driven and clutch

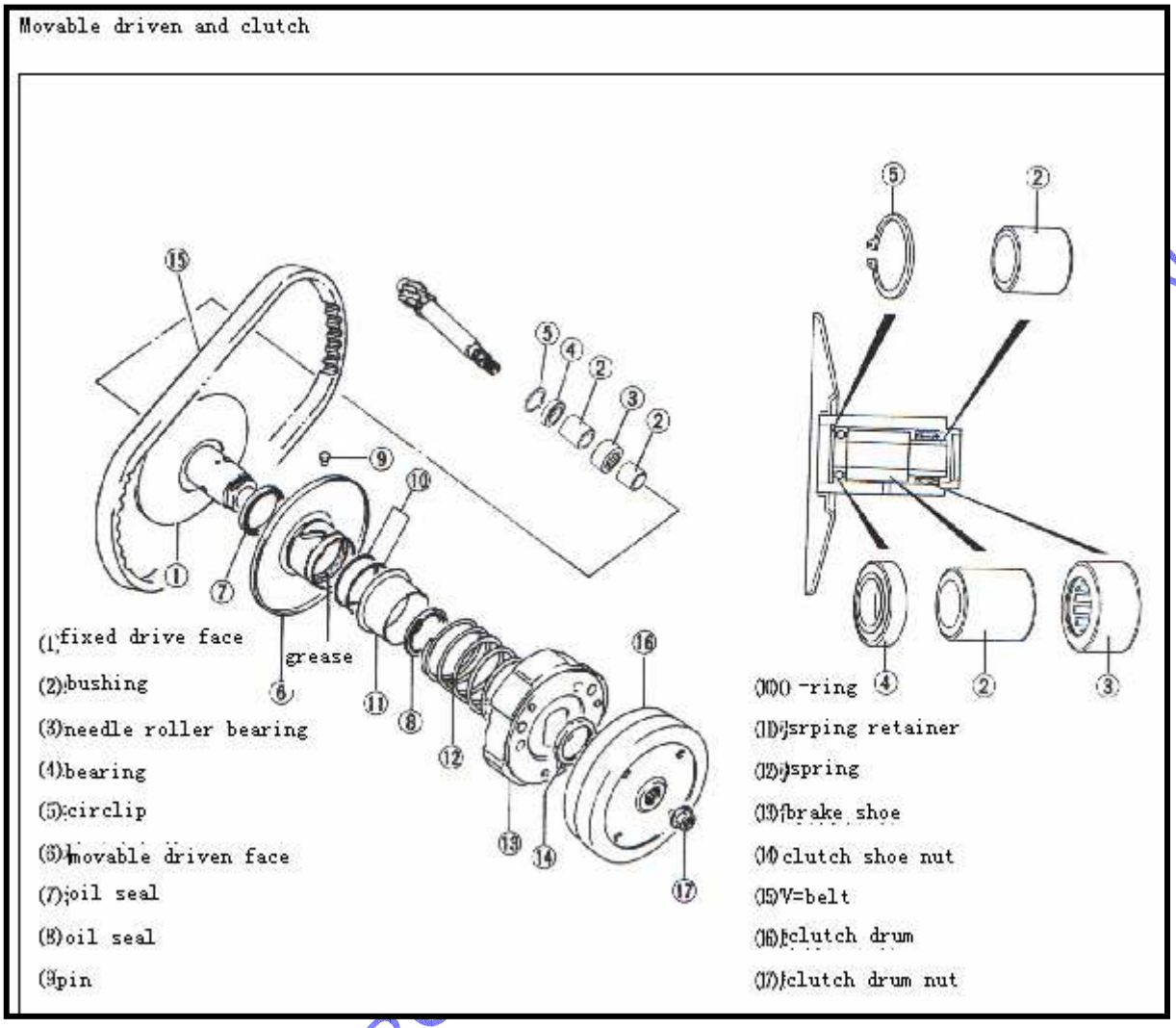

- Install the bearing ○ in the fixed driven face ○ with the special tools.
- Install needle bearing ○ □

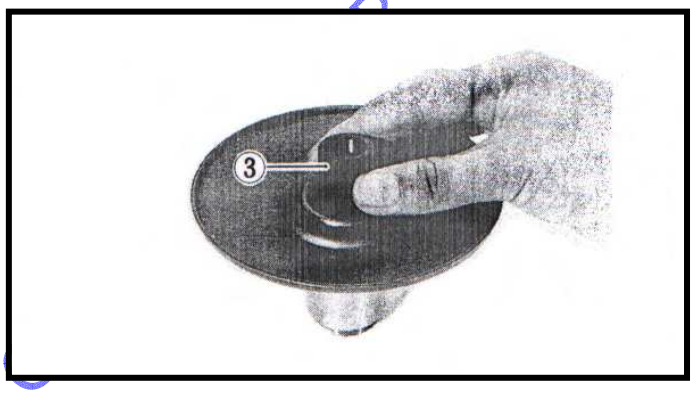

- Install the bearing ○ with special tool

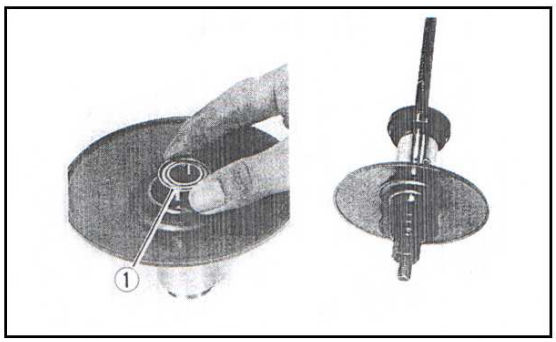

- Install the spacer ○ and cir-clip○.

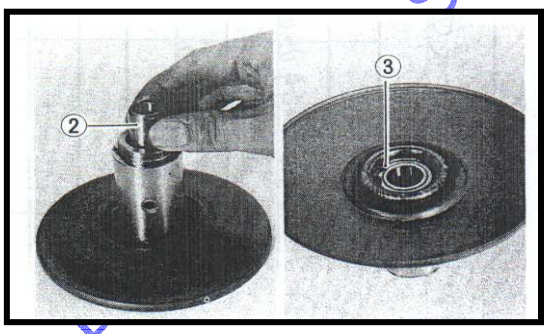

- Install the new oil seals○ and ○ to the movable driven face with the special tool.
- Apply grease to the lip of oil seals and groove of inside of movable driven face.

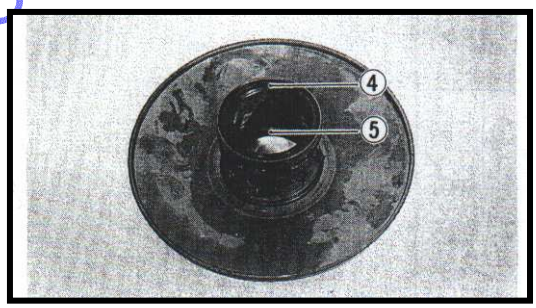

<u>*NOTE:*</u>
When reinstalling the movable face to the fixed face, make sure that the oil seal is positioned properly.

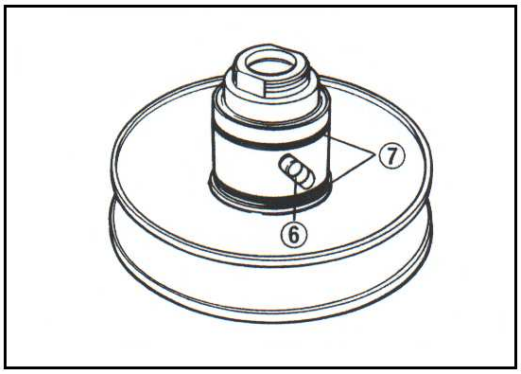

- Install the pin ○ at three places on the driven face hub.
- Apply grease lightly to the cam part where the pins are placed.
- Install two O-Rings○.

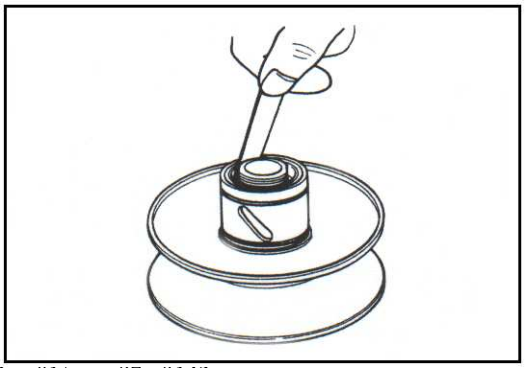

- Install the movable driven face seat①.

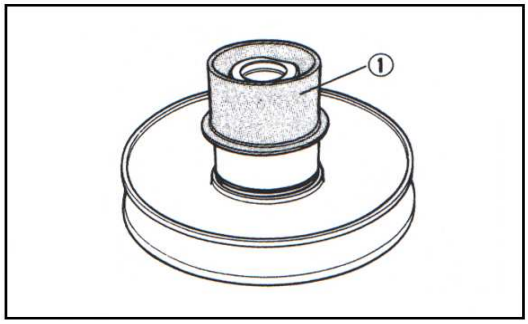

- Install the clutch shoe assembly② and nut③.

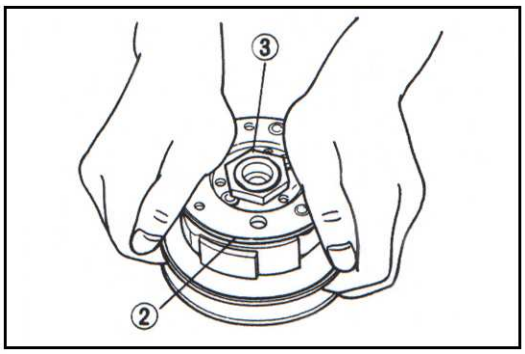

- Tighten the nut ③ to the specified torque with the special tool.

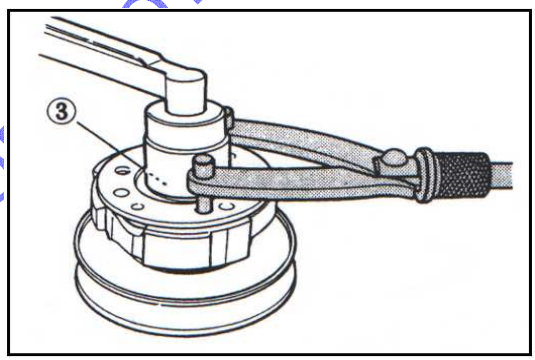

Tightening torque
50-60 Nm(4.0-6.0kg.m)

- Insert the V-belt between the driven faces as deep inside possible while pulling the movable driven face all the way outside to provide the maximum belt clearance.

CAUTION:

The belt should be positioned so that the arrows on the belt periphery points the normal turning direction.
The V-belt contact face on the driven faces should be thoroughly cleaned to be free from oil.

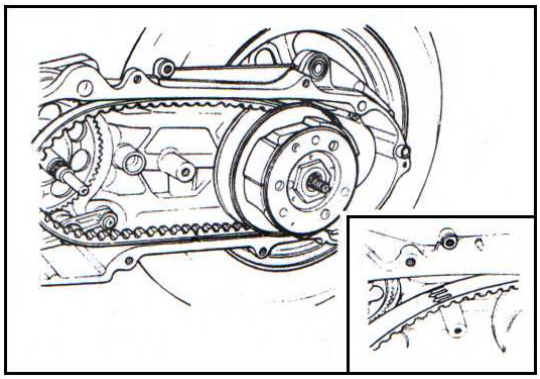

- Thoroughly clean the clutch housing to be free from oil and position it over the clutch shoe assembly.
- Tighten the clutch-housing nut to the specified torque with the special tool.

Torque
50-60 N.M (5.0~6.0 kg.m)

MOVABLE DRIVE

MOVABLE DRIVE

(1) movable drive face
(2) roller
(3) movalbe drive plate
(4) damper
(5) O-ring
(6) movable drive face cover
(7) spacer
(8) fixed drive fan
(9) kicking starter
(10) kick starter dirven gear
(11) -spring
(12) gasket
(13) retainer
(14) V-BELT

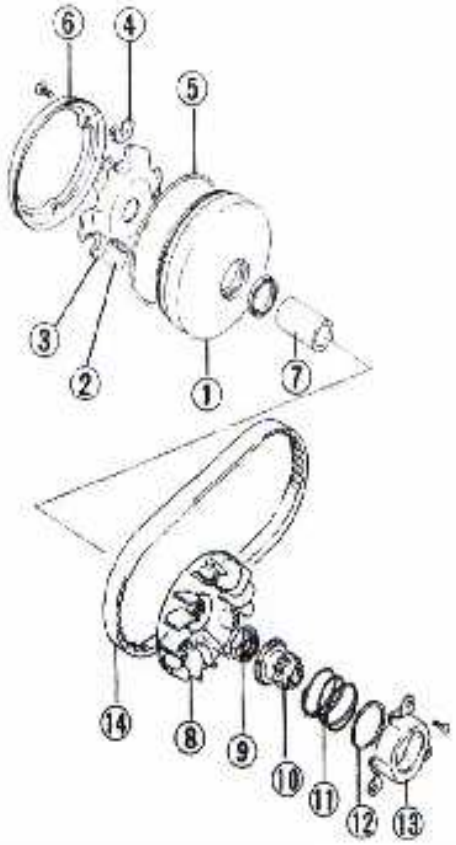

- Apply grease to all the sliding and rolling surfaces for six roller weights. For each weight, approximately 1.5g of grease should be used.

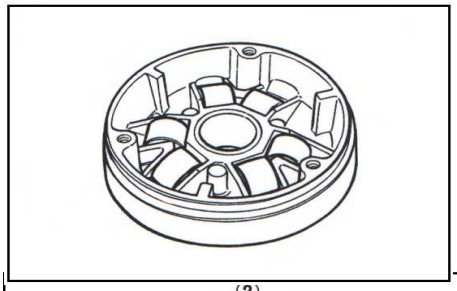

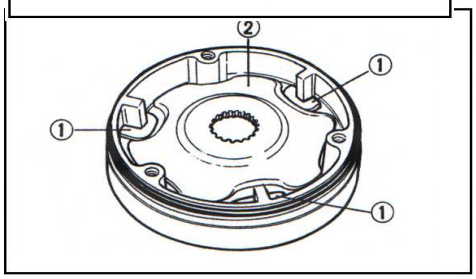

- Mount the three dampers ① on the movable drive plate ② and install it on the movable drive face.
- Position the O-RING on the movable drive face.

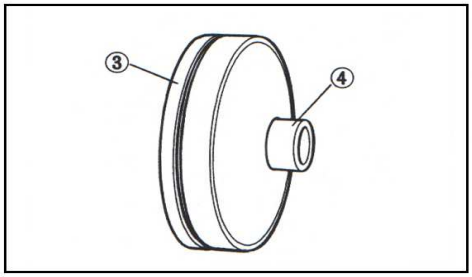

- Install the movable drive face cover ③.

NOTE:

Make sure that the movable drive plate is fully positioned inside, otherwise the rollers may come out.

Insert the spacer ④.

- Position the movable drive face subassembly on the crankshaft as shown in illustration.

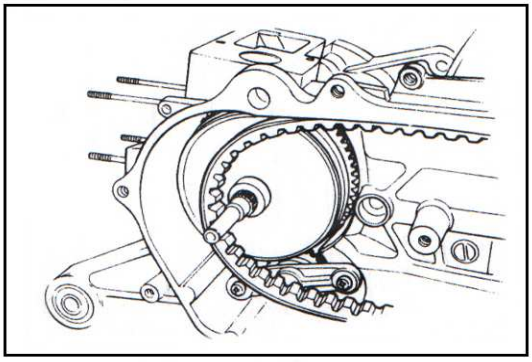

NOTE

Thoroughly clean the belt contact to be free from oil.

- Install the fixed drive fan.
- Tighten the nut to the specified torque with special tool.

Tightening torque

50-60N.M(5.0-6.0kg-m)

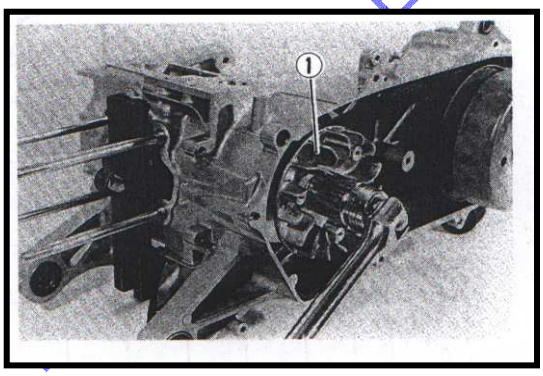

- Fill grease in the groove provided inside sliding surface of the kick driven gear and install ○ on the end of the crankshaft.

  Wipe off excess grease. Install washer ○ and spring○.

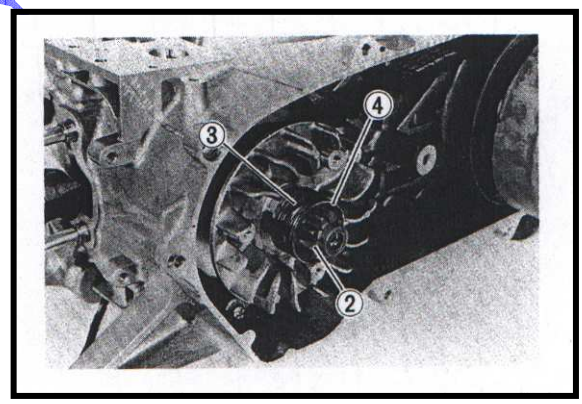

NOTE:

When installing washer face the resin surface of washer to outside.

- Install the retainer.

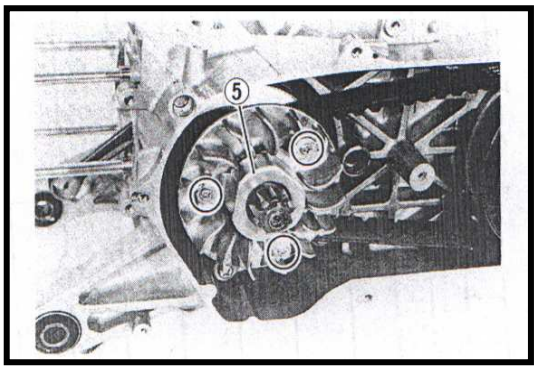

- Continue turning the fixed drive face○ by hand until the belt is seated in and both the drive and

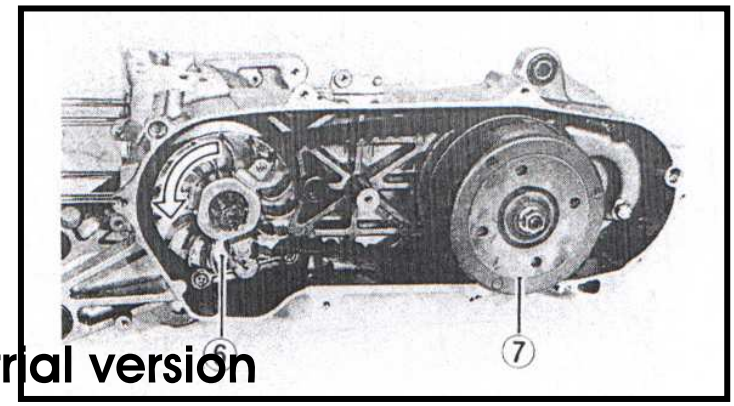

driven faces ○ will move together smoothly without slip.

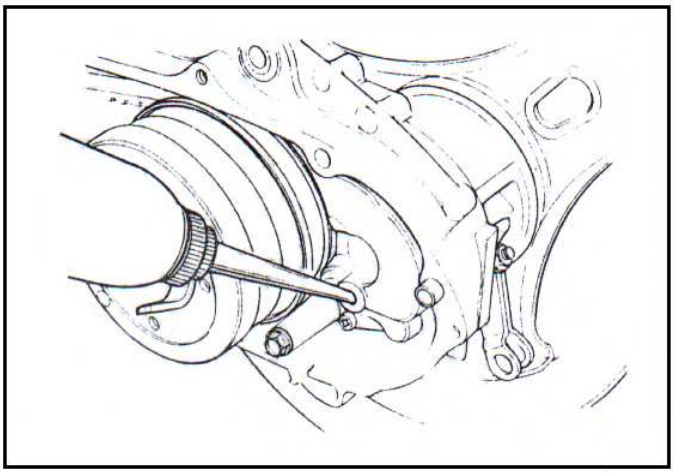

- Fill the final gearbox with engine oil up to the level hole.

Oil capacity□100 ml

- Tighten the oil level bolt to the specified torque.

Tightening torque□

9-15N.M (0.9~1.5 Kg.m)

KICK STARTER

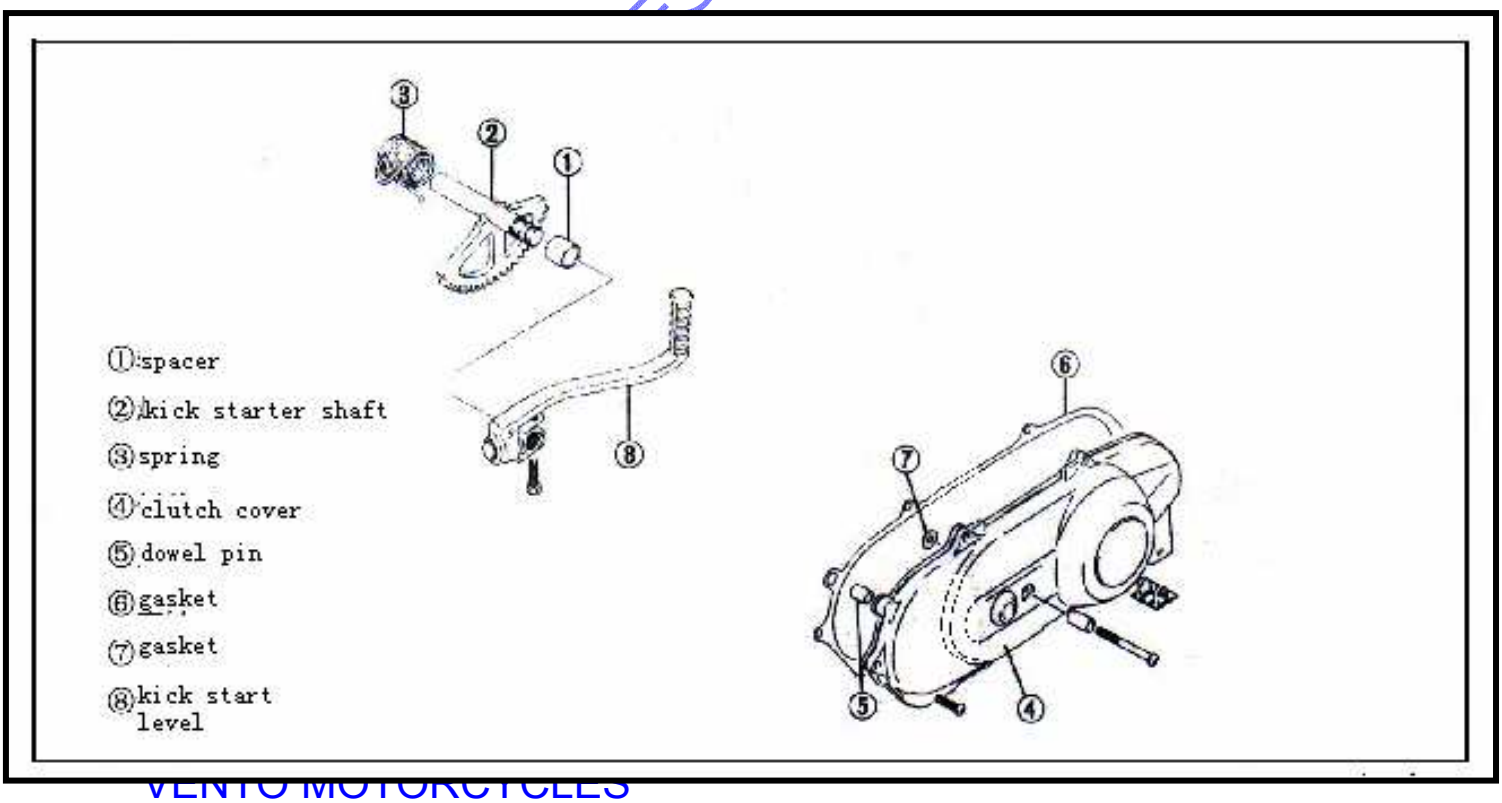

- Apply grease on inside surface of the kick-starter shaft spacer.

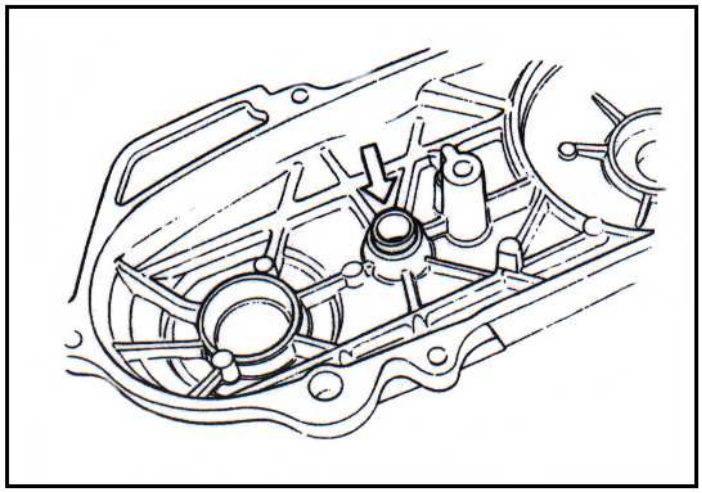

- Position the kick-starter shaft return spring and hook the spring end ① on the clutch cover boss ②.

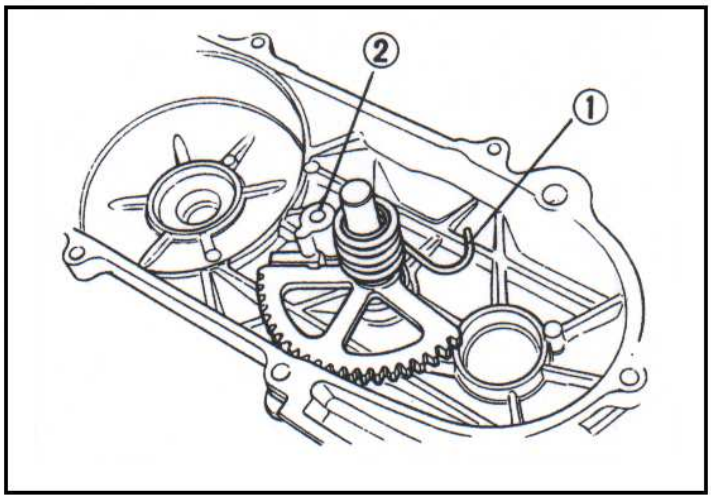

- Install the dowel pins ①.
- Install the new gaskets ② and ③.

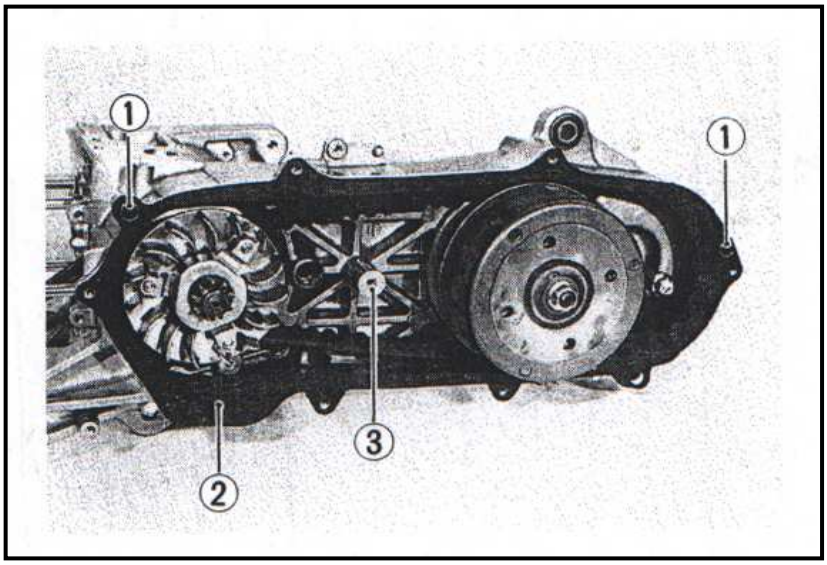

- Fix the gasket to the clutch cover as shown in the illustration.

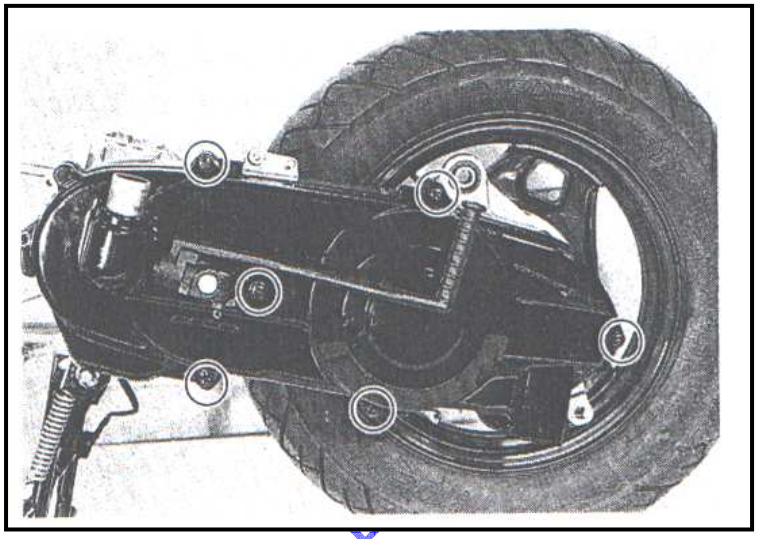

NOTE: Install the kick starter lever as shown in the illustration.

Tightening Torque

8~12N.M (0.8-1.2kg-m)

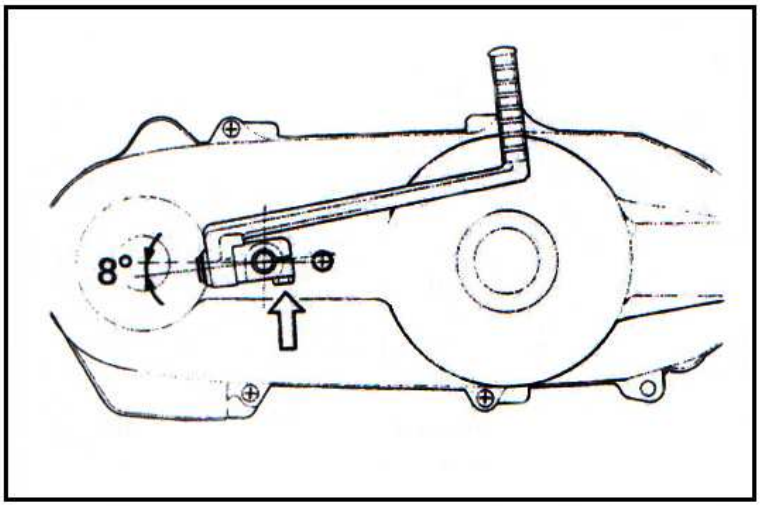

PISTON

- Install the piston rings on the piston. The first and the second ring.

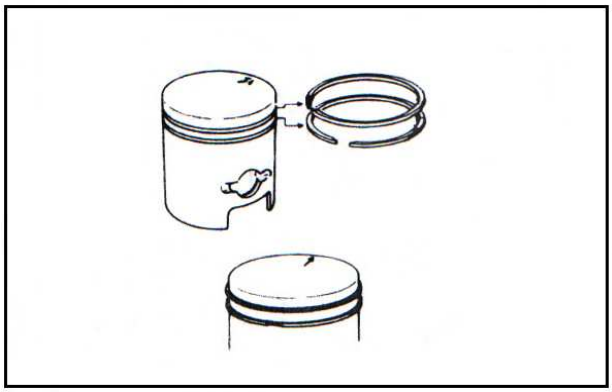

NOTE:
Position the ring so that the marking is on upside.

- It is extremely important that, when the piston is fed into the cylinder, each ring in place should be so positioned as to hug the locating pin as shown in illustration.

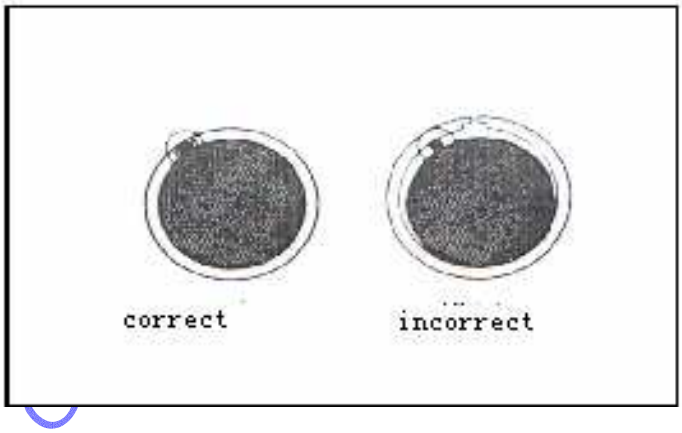

- Apply CCI oil on the piston and install the piston to the connecting rod.

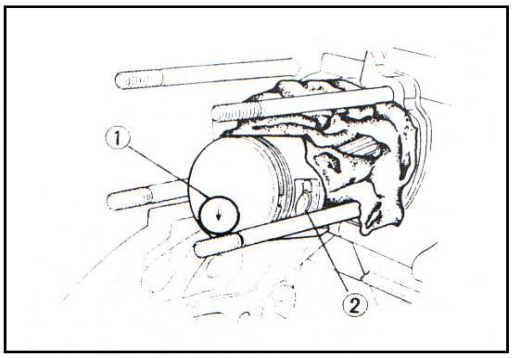

NOTE
The arrow mark ① on the piston head should point the exhaust side.

- The cir-clip should be mounted in such a position ② that the mating ends of the cir-clip do not coincide with the grove portion of the piston.
- Position the cylinder base gasket.
- Apply CCI oil on the position and cylinder wall surfaces and install the cylinder over the piston carefully.

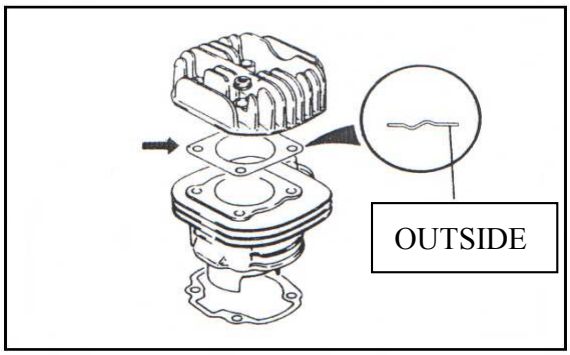

- Tighten the cylinder head nut to the specification.

Tightening torque

18-28Nm (1.8~2.8 Kim

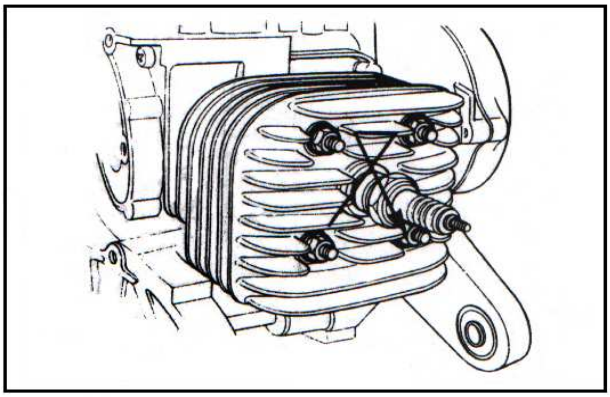

OIL PUMP DRIVEN GEAR AND OIL PUMP

- Install right crankcase oil seal press board

- Apply grease to the oil pump driven gear and install into the crankcase.

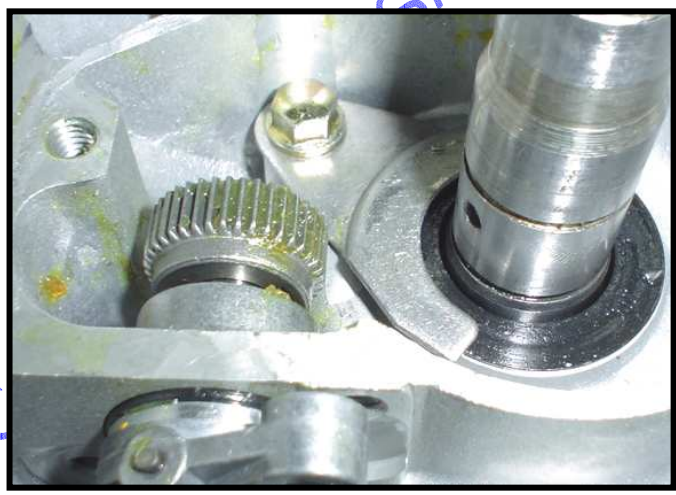

- Install the oil pump into the crankcase and tighten with specified torque.

Tightening Torque

3~5N.m(0.3~0.5 kgm)

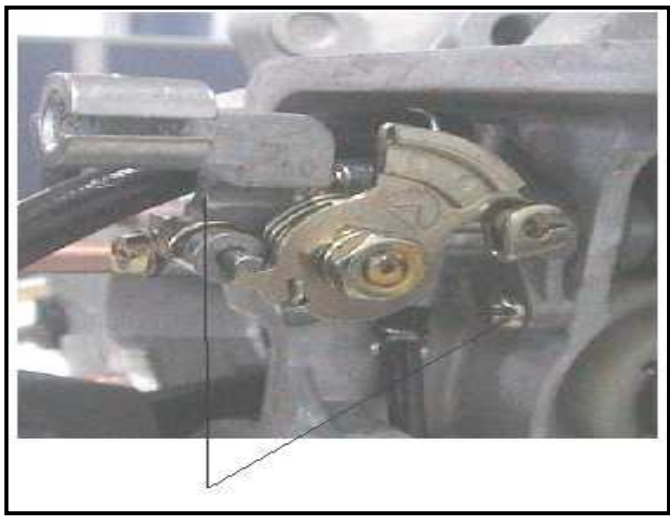

Reed Valve

- Install reed valve paper gasket.
- Install reed valve
- Install oil hose

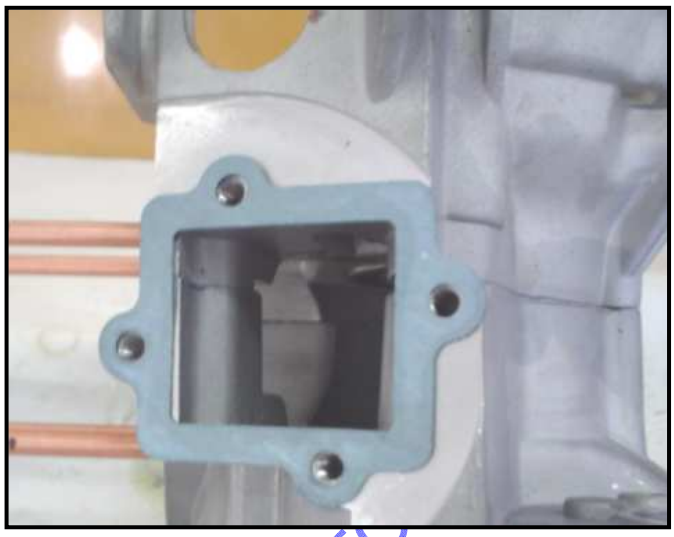

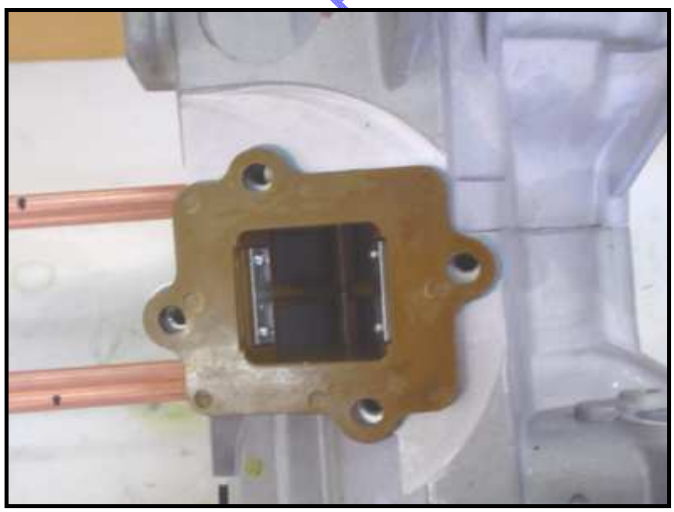

INTAKE PIPE

- Install the gasket and intake pipe with reed valve to the crankcase.
- Install the clamps.
- Install the oil hose.

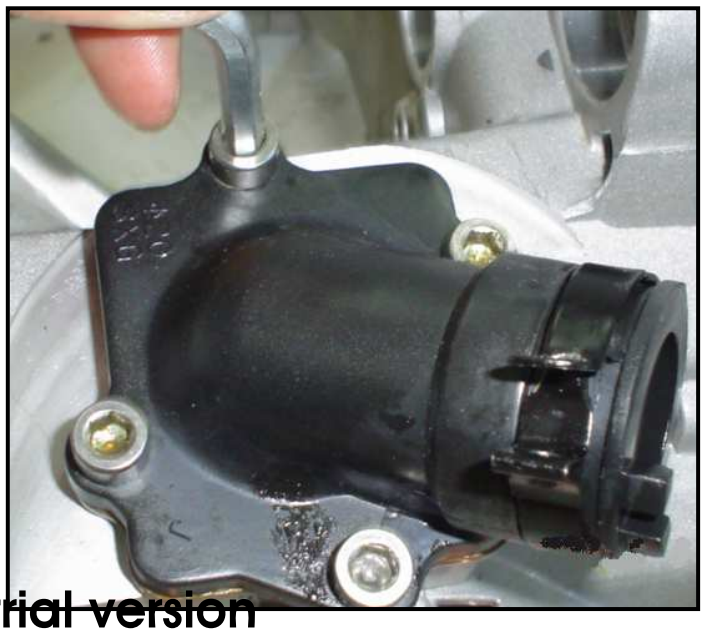

MAGNETO

- Degrease the tapered portion of the crankshaft and also the magneto rotor.
- Install the key.
- Install the stator and retainer and tighten with specified torque.

- Apply thread lock super “1322”to the rotor nut and tighten it to the specified torque with the special tool.

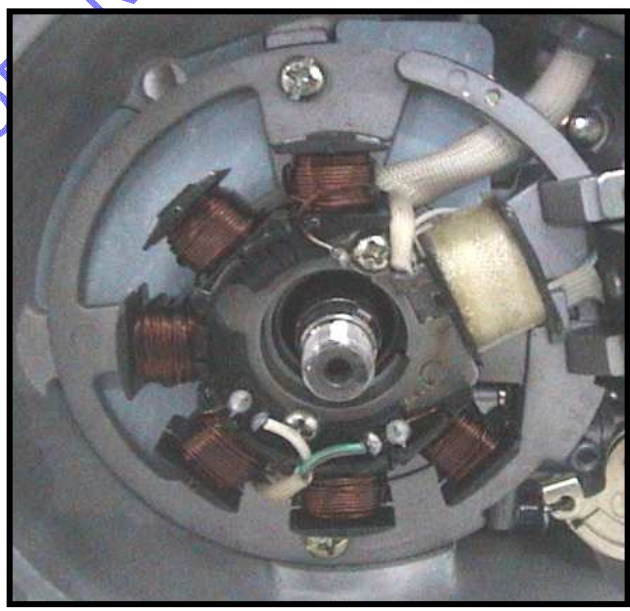

Tightening torque

40-45N.m (4.0-4.5kg.m)

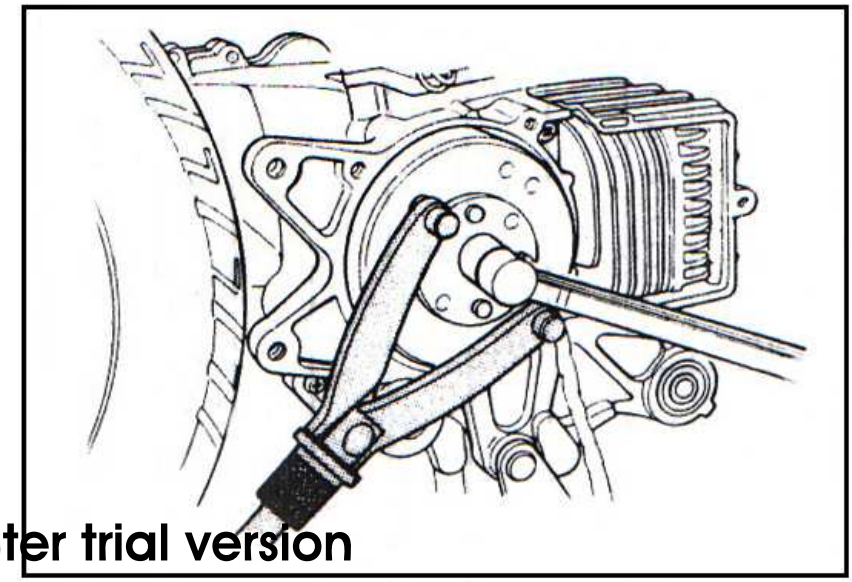

- Install the Rotor ① and cooling fan ②.
- Install the magneto lead wire and starter motor lead wire correctly.

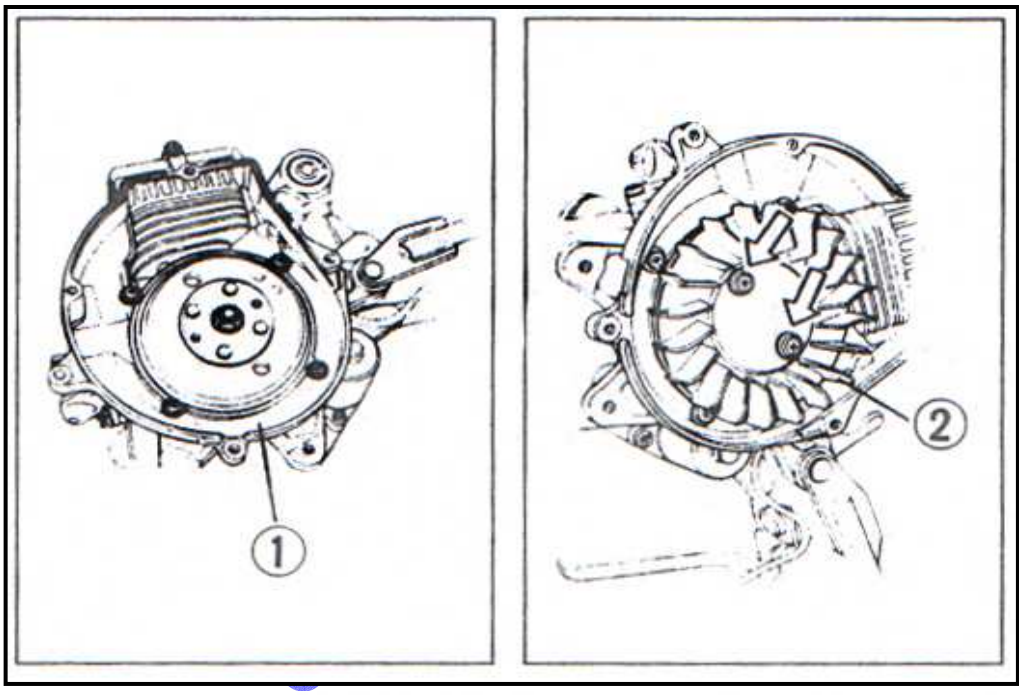

- Install the cooling fan cover ③.
- Tighten the screw Ⓐ and Ⓑ.

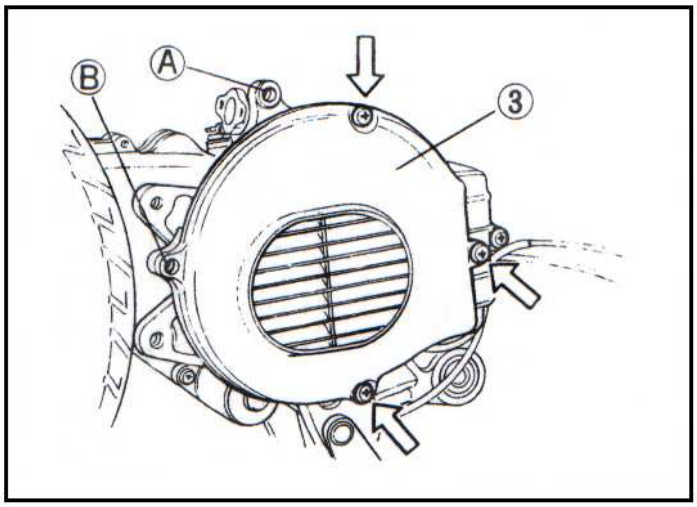

- Install fan guiding cover

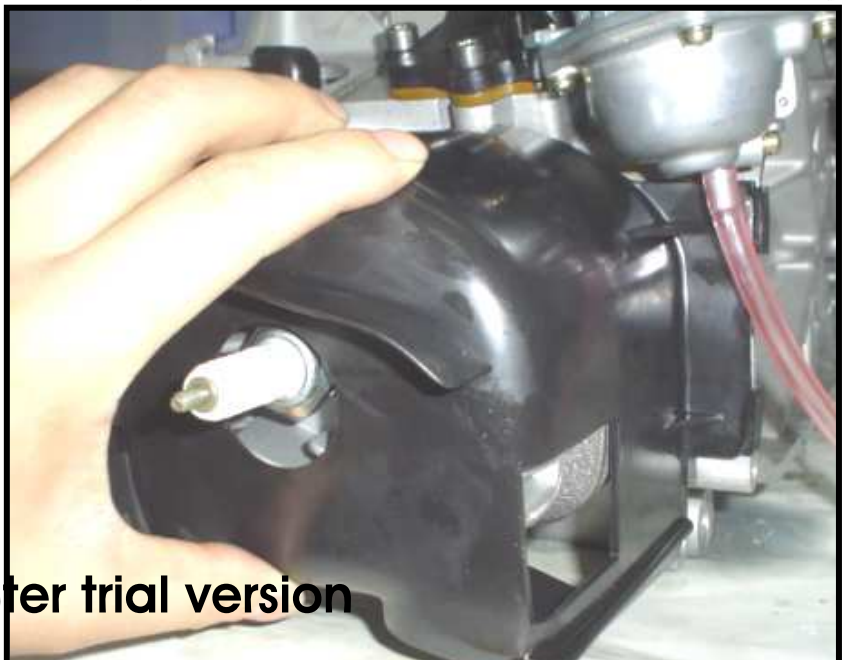

- Install exhaust pipe screw ④ and screw ⑤ for tightening the muffler to their specified torque.

TIGHTENING ORQUE:

④ *8~12N.m(0.8-1.2kg.m)*

⑤ *18~28N.m(1.8-2.8kg.m)*

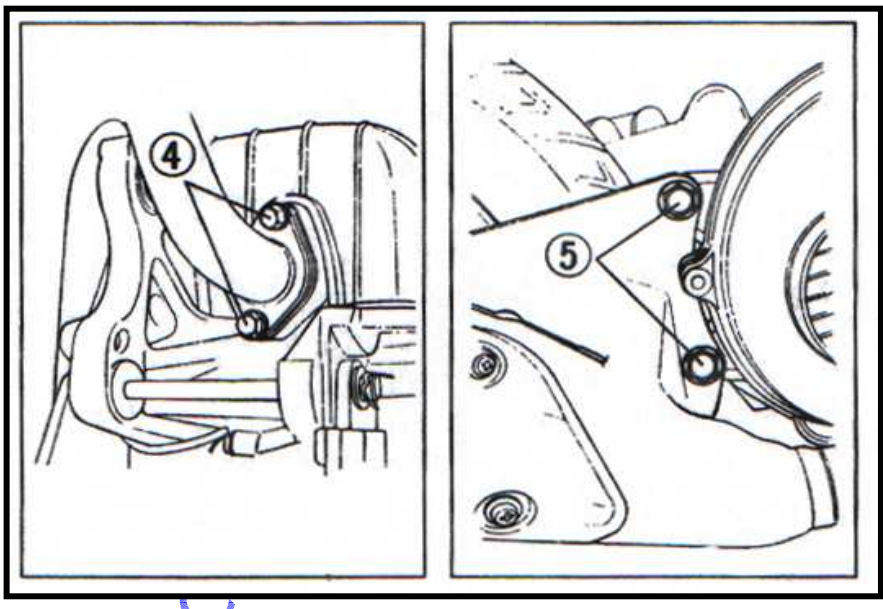

- Lubricate brake cam shaft Ⓐ with special grease.

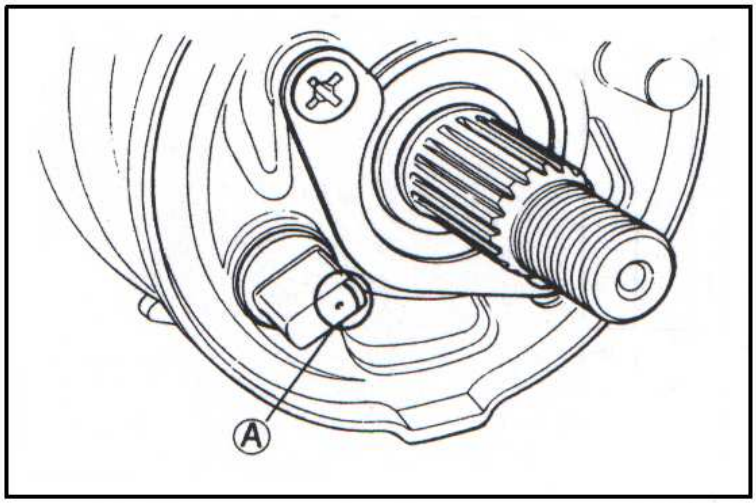

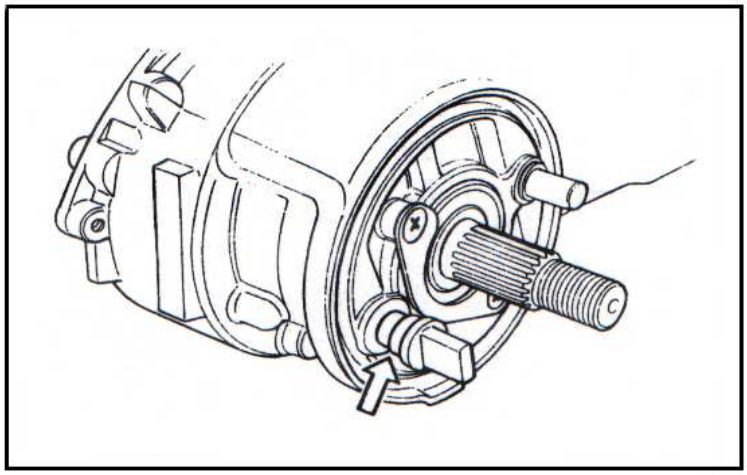

CHAPTOR 4

FUEL AND LUBRICATION SYSTEM

CONTENTS

FUEL SWITCH

When turning the starter motor, a negative pressure is generated in the combustion chamber. This negative pressure draws on the fuel tap diaphragm, (through a passage way in the carburetor intake pipe) and vacuum hose. Due to this, the negative pressure increases behind the fuel tap diaphragm, until it is higher than this valves spring pressure. The fuel valve in the fuel is then forced to open (due to this diaphragm operation) and allows fuel to flow into the carburetor float chamber.

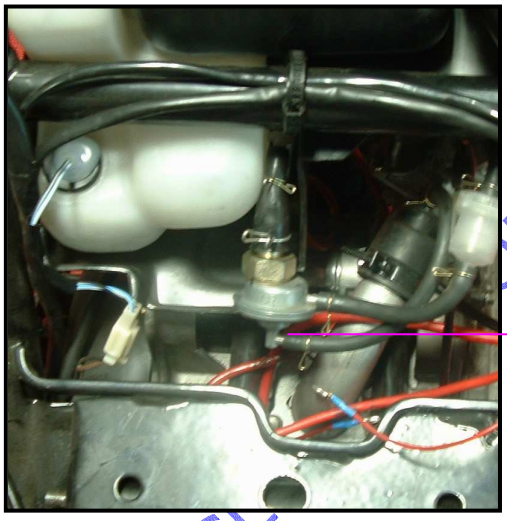

CARBURETOR

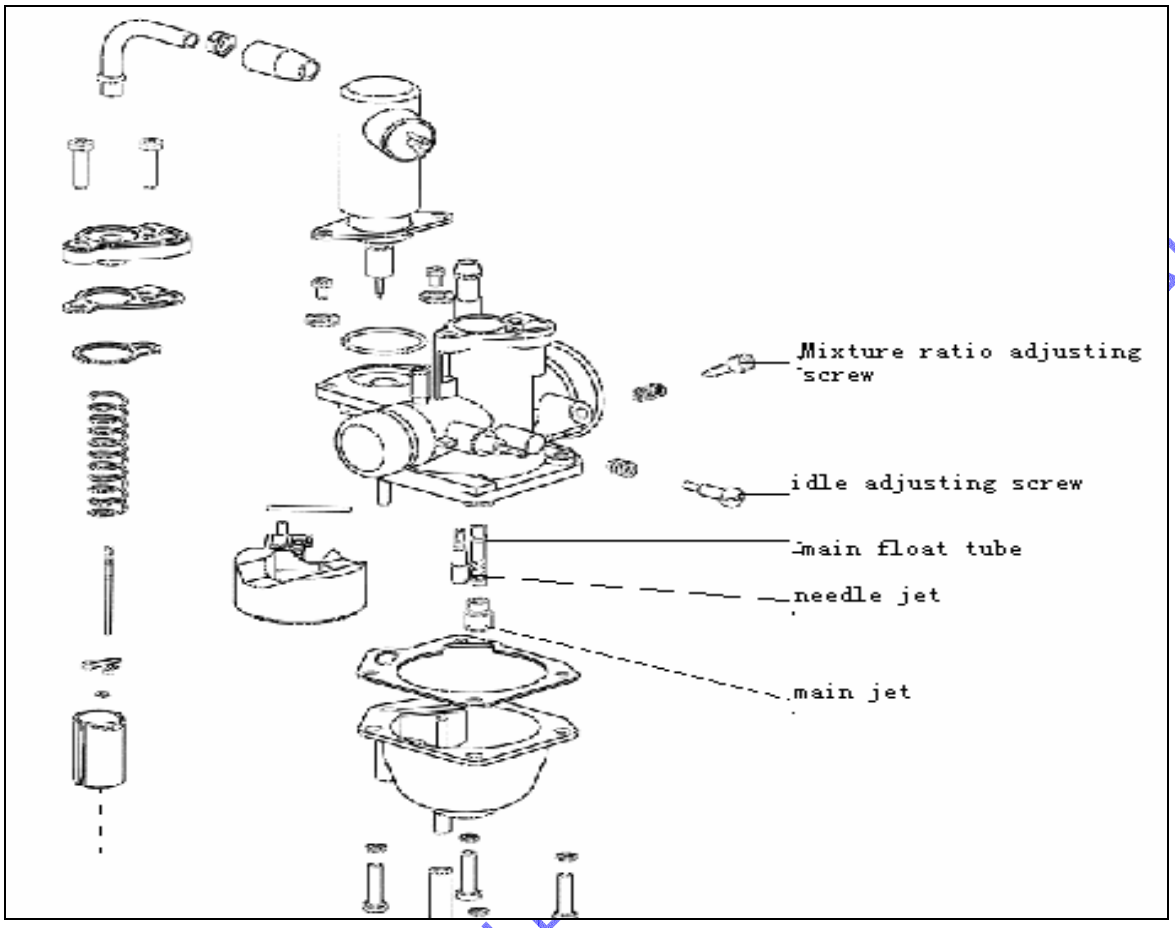

CARBURETOR	Carburetor Type Identification code Throat tube diameter Main jet size Idle needle jet size Fuel needle clamp position Idle air adjusting screw Float height Throttle cable play	Side Draught PZ19JB 19mm 80 57.5 3rd groove from top extrude 1 ½ ± ½ turnout 13±1mm 3~6 mm (0.1~0.2 In)

CARBURETION

Proper carburetion is determined according to the results of various tests, mainly concerning engine power, fuel consumption and cooling effect of fuel on engine, and jet settings are made so as to satisfy and balance all of these conditions. Therefore, the jet should not be replaced with a size other than the original. And the positions of adjustable parts should not be changed except when compensation for the mixture ratio due to altitude differences or other climatic conditions. When adjustment is necessary, refer to the following.

fuel-air mixture ratio can be changed as follows:

throttle opening	means of changin ratio	standard setting
 slight	pilot jet 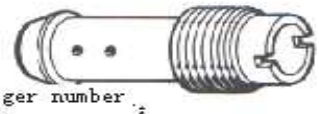 larger number : richer mixture smaller number : leaner mixture	#57.5
 medium	jet needle 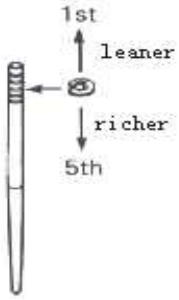	3rd groove
 height	main jet  larger number : richer mixture: smaller number : lean mixture	#80

VENTO MOTORCYCLES

AIR –FUEL SYSTEM

AIR-FUEL FLOW CIRCUIT

Fuel is being supplied to the carburetor from fuel tank by controlled fuel cock assy. Air filter box is fitted on the left side of the motorcycle. Fuel gets atomized and mixes with clean air in right proportion in the carburetor and then air fuel mixture is supplied to the combustion chamber of the engine. In engine this air fuel mixture is controlled by the intake valve and camshaft rocker arm mechanism.

AIR- FUEL FLOW CHART

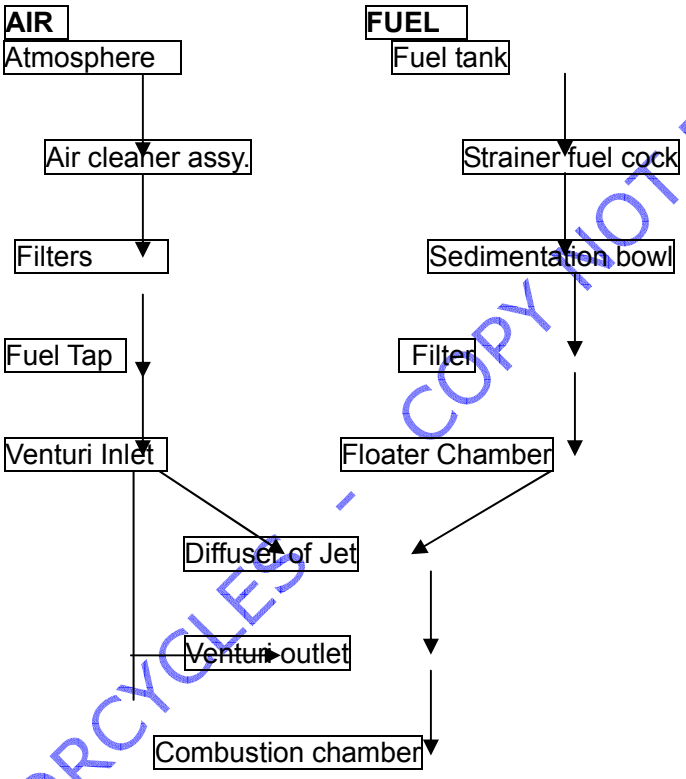

AIR FUEL MIXTURE RATIO

• ***Starting*** ----------	***7~8: 1***
• ***Idling speed***----------	***10~12: 1***
• ***Slow speed*** ----------	***12~14: 1***
• ***Medium speed***----------	***15~17: 1***
• ***High speed***----------	***13~15:1***

CARBURETTOR CIRCUITS :

TRITON R4 CARBURETOR HAS FOLLOWING 6 MAIN CIRCUITS

1. *Fuel Intake circuit*
2. *Choke circuit*
3. *Idling speed circuit*
4. *Slow speed circuit*
5. *Medium speed circuit*
6. *High speed circuit*

CARBURETTOR CIRCUITS

1. *FUEL INTAKE CIRCUIT*:

From fuel tank fuel comes into float chamber of carburetor by controlled fuel cock assy. Separate vent is provided at LH side of carburetor body to maintain inside atmospheric pressure. When fuel starts filling the float chamber, float rises up words along with the float pin and after a certain level it stops further flow of fuel.

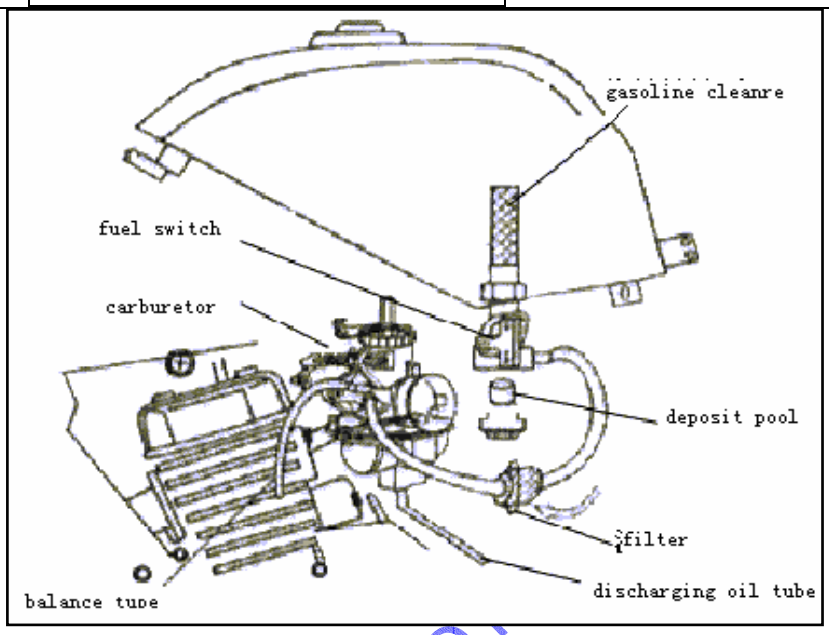

2. *CHOKE CIRCUIT*:

Choke is provided for easy starting, since it requires rich mixture. Hence choke knob is being operated from the carburetor. Due to this an air stopper (Butterfly valve) comes on the way to the venturi (Air filter side) of the carburetor, thus reducing the amount of air being mixed with fuel. Excessive fuel is being sucked from the slow jet and less quantity of air enters from the choke valve and from the small opening below the throttle valve.

When the motorcycle engine starts, a spring loaded window is provided in the choke actuating lever itself so as provide in the choke actuating knob itself so as provide extra air as required to run the engine in rich mixture.

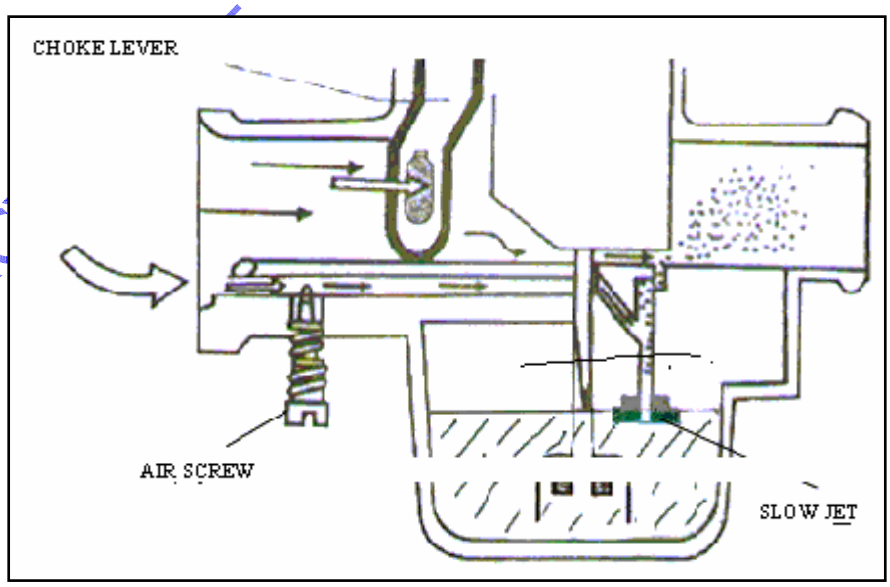

3. IDLING CIRCUIT:

After starting operation choke is released, more air starts flowing thru the venturi. From slow jet fuel is sucked due to venturi effect. A separate passage from the air filter side is coming at the diffuser of the slow jet for the atomization of fuel in slow jet. This atomized fuel is sucked into the venturi as started above from the slow jet (As shown in figure). The amount of air for atomization is regulated by airscrew located at bottom side of the carburetor body.

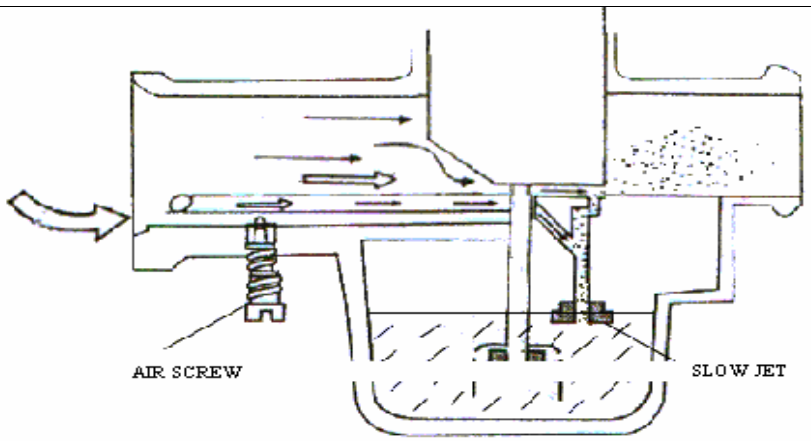

4. SLOW SPEEDCIRUIT

Slow speed requires very less acceleration. Air fuel mixture is being supplied by slow jet and also from main jet. This is due to partial opening of throttle valve, lifts needle jet upwards. Hence some quantity of air fuel mixture coming out from main jet diffuser also mixes along with slow jet mixture to increase the mixture quantity as required by engine.

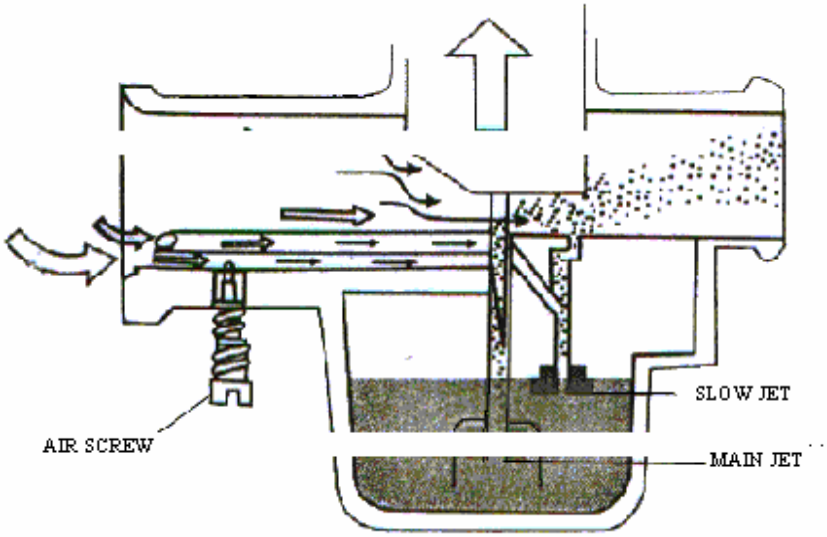

5.MEDIUM SPEED CIRCUIT

(Economy speed range)

Further acceleration the air fuel mixture supplied to engine only from main jet. During this slow jet stops supplying air fuel mixture due to venturi effect. Hence air is drawn to main jet through metered air jet (Brass tube) for better mixing of fuel with air in the main jet diffuser. Main jet started supplying air fuel mixture in economy range i.e. more air with less quantity of fuel as per engine requirement.

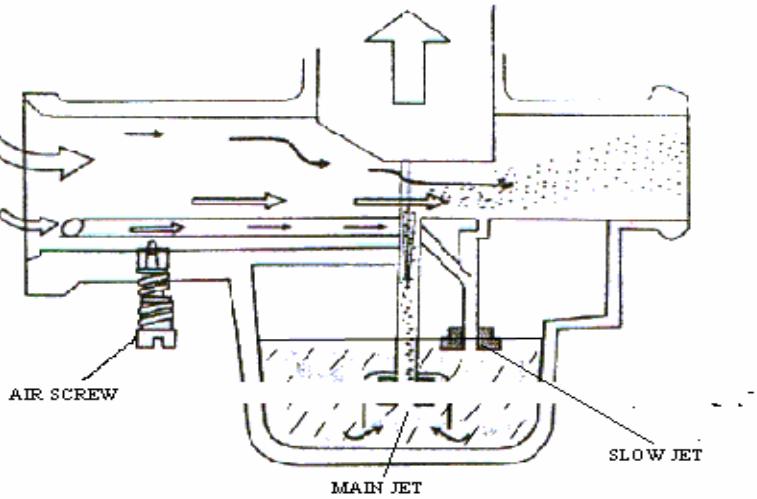

1. ***HIGH SPEED CIRCUIT*** During acceleration the throttle valve (piston) is fully raised, more air is being supplied due to higher velocity. Hence pressure drops at the opening of throttle jet needle. Where as more fuel is sucked from the main jet due to tapperness of jet needle. A jet holder is provided to the main jet to avoid fuel flow strain (turbulence) effect in the float chamber created during the very high speed to diffuser (As shown in the figure)	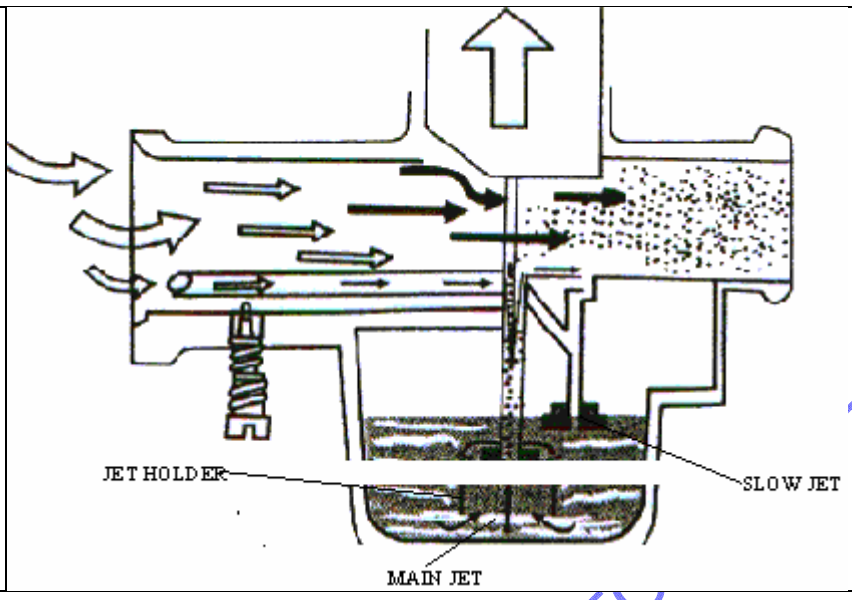

CARBURETOR

CARBURETTOR REMOVAL/INSTALLATION FROM MOTORCYCLE

REMOVAL:

1. Turn fuel switch "OFF" position.
2. Disconnect fuel pipe from carburetor by pressing clip.
3. Loosen the clamp over air cleaner connecting tube (Air duct).
4. Drain the fuel from carburetor float chamber in a separate pan loosening drains screw.
5. Remove insulator clamp screw.
6. Pull out the carburetor assy. Along with insulator from air duct.
7. Open the carburetor top cap, pull out the throttle valve along with needle, clip, and spring & throttle cable.
8. Remove the overflow/drain pipe.

INSTALLATION:

FOLLOW THE REVERSE ORDER OF REMOVAL

NOTE:

- After installation check for any fuel leakage from the carburetor or fuel line.
- Check for the throttle smooth movement; if necessary adjust throttle grip free play 3 to 6 mm.

CARBURETTOR ASSEMBLY

DISASSEMBLY PROCEDURE FOR CARBURETTOR CLEANING:

- Remove the throttle valve from the accelerator cable by compressing the spring up from the seat in long slit. Remove the tip of the cable from the slot of the valve.
- Remove the jet needle from the throttle valve along with clip and plate.
- Remove the airscrew with spring.
- Remove the Idling screw with spring.
- Remove the float chamber by unscrewing three screws.
- Pull out the float arm pin to remove the float.
- Remove the main jet along with jet holder and needle.
- Remove the slow jet.
- Now clean all the carburetor components and apply compressed dry air in all passages (galleries)

NOTE:

- Don't remove clip from the jet needle groove.
- Ensure that float and float valve is being removed before carrying out any other jobs on carburetor. So that these components will not get damage.

ASSEMBLY PROCEDURE OF CARBURETTOR:

- Screw the slow jet (Ensure that all holes are clearly visible on the slow jet body).
- Fix needle jet from main jet hole (Ensure that the smaller dia face towards carburetor body hole).
- Tighten the needle jet holder (Ensure that all holes clearly visible on the needle jet holder body).
- Screw the main jet along with jet holder.
- Insert the float arm pin through the pivot and the float.
- Check float height (Specified13±1mm) adjust, if necessary this will avoid overflow.
- Fix the float chamber.
- Fix idle screw and airscrew along with spring (Initial airscrew setting one and half turn out).
- Insert the jet needle along with clip and plate into the throttle valve (Ensure that needle lock clip is in 3rd groove position from top).
- Connect the throttle valve to the accelerator cable first compress the spring into the cap, Insert the tip of the cable through the slot in the throttle valve base and fix cable in long slit rest position.
- Align the groove on the side of the throttle valve with the guide pin in the carburetor body. Check for its smooth movement.
- Tighten the top cap over carburetor body.

CARBURETTOR TUNING OR ADJUSTMENT PROCEDURE

After installation the carburetor in the engine as per above said procedure, follow the following steps:

1. Warming up the engine to the normal running temperature.
2. Adjust Idling speed to 1800±100 RPM by throttle stop (Idle) screw.
3. Turn the airscrew all the way inside until seats lightly in the carburetor body.
1. If engine stops then… OK (Incase does not stop, check for air leakage from insulator "O" ring and rectify).
2. Readjust airscrew position to 1 $\frac{1}{2} \pm \frac{1}{2}$ turns out.
3. Start the engine and increase the Idling speed by turning the Idle (stop) screw in anticlockwise direction, till the engine speed increases to the range of 2000 to 2500 RPM.
4. Open the airscrew outwards (anticlockwise) slowly till engine RPM increases to the peak/highest speed position while setting. Now stop adjusting air screw (Maximum recommended air screw opening position 1¾ turns out).
5. Readjust Idling speed to 1800±100 RPM by the throttle stop screw & ensure that exhaust emission Carbon Monoxide CO % 1.5 to 2.0 %.
6. After adjusting Idling speed, check for its stability/flat spot/missing if any, by accelerating few times. Repeat above said steps until engine speed increases smoothly.

NOTE:

- Do not apply force or over tight the airscrew. Damage may occur incase the air screw is being tightened against the airscrew seat.
- Incase the Idling speed is too low engine will stop; if it is too high will cause fuel consumption.

WARNING

While running engine in Idling speed turn the handle bar to the extreme left or right hand side, if any change in idling speed noticed, the accelerator cable may be wrongly routed or improperly adjusted. Correct the same before test ride.

CHAPTER 5

ELECTRICAL SYSTEM

CONTETNS

IGNITION SYSTEM

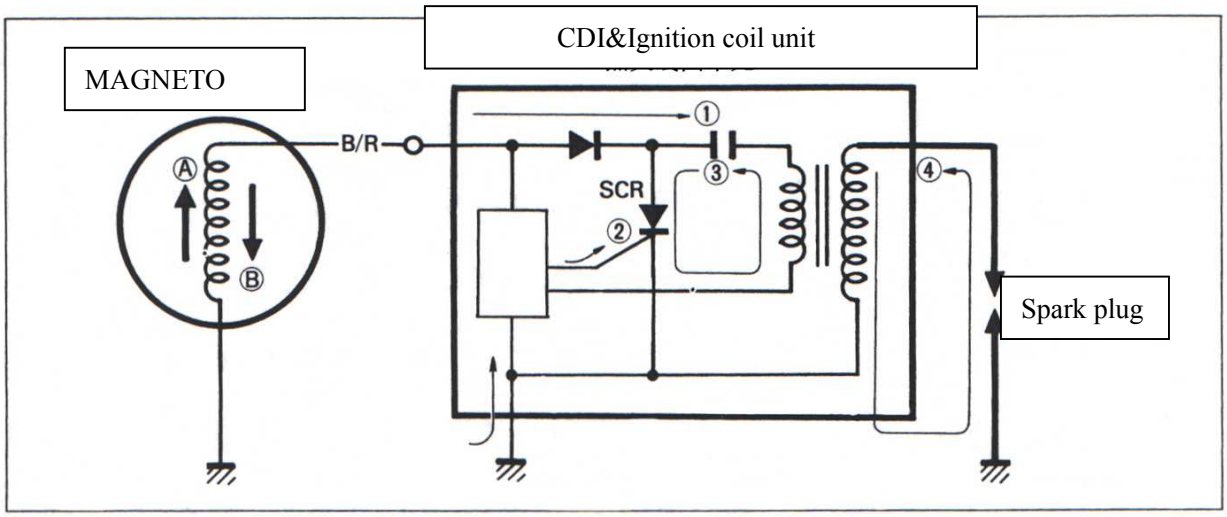

The ignition system consists of a flywheel magneto, a CDI&Ignition coil unit and a spark plug. ① As the rotor generates, an AC current is induced in the coil. Then current induced in the Ⓐ direction charges up the capacitor.

② As the rotor rotates further, the current is induced in the reverse direction. The current causes a voltage applied through the ground to the gate of SCR. ③ As the SCR conducts, the energy, which has been charged in the capacitor, is instantaneously discharged through the primary winding of the ignition coil.

CDI UNIT AND IGNITION COIL INSPECTION

CHECKING WITH ELECTRO TESTER

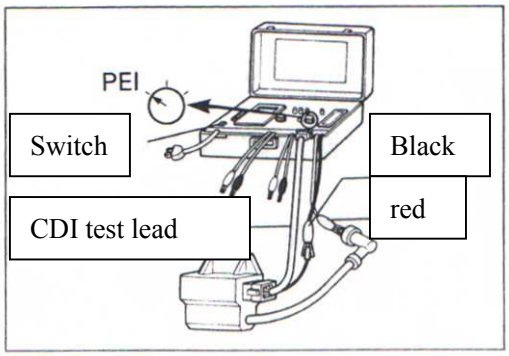

Connect the CDI test lead to the coil's primary connector.

Connect the high-tension leads, red ⊕ lead to the spark plug cord and the black ⊖ lead to the black lead of the test lead.

- Set the test selector knob to "P.E.I".
- Connect the power lead to the appropriate AC source.
- Switch the power on.

NOTE:

The spark in the spark gap window should be strong and continuous, not intermittent, across a preset 8mm(0.32in) gap. Allow the spark to jump the test gap for at least five minutes continuously. To insure proper operation under the temperature of actual riding.

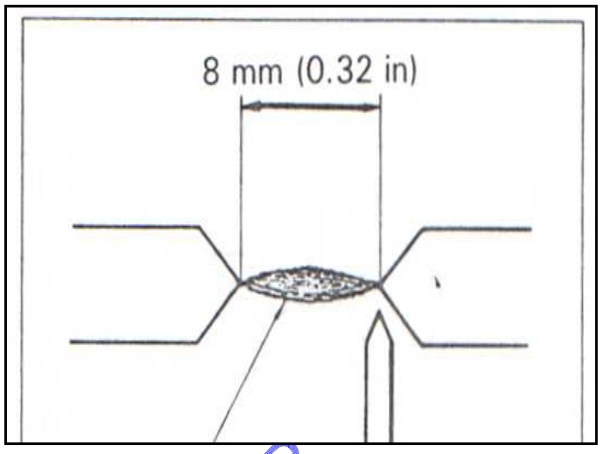

MAGNETO EXCITING COIL

- Remove the right frame side cover.
- Disconnect the exciting coil lead wire (black with red tracer).
- Using a Multimeter, measure the resistance between the B/R lead wire and ground. If the resistance checked is incorrect, replace the coil.

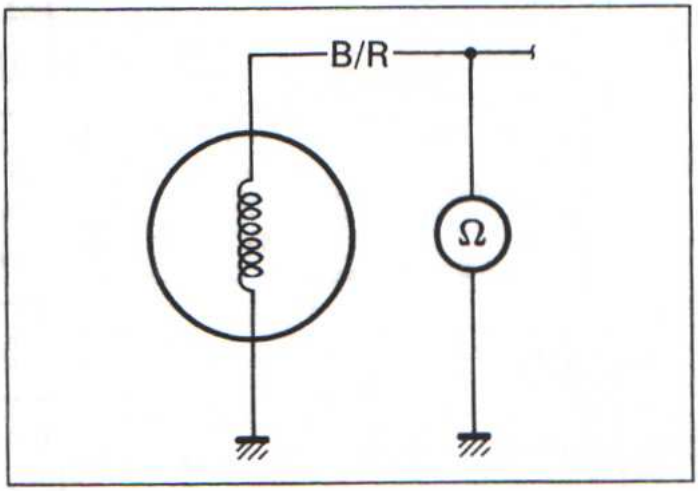

Exciting coil restance 140-220Ω

CHARGING AND LIGHTING SYSTEM

The charging system uses the flywheel magneto shown in the figure. The charging and lighting coils are mounted on the magneto stator and generate AC as the flywheel rotor turns. AC generated in the charging coil flows to the regulator/rectifier, which changes AC to DC. The DC Then charges the battery.

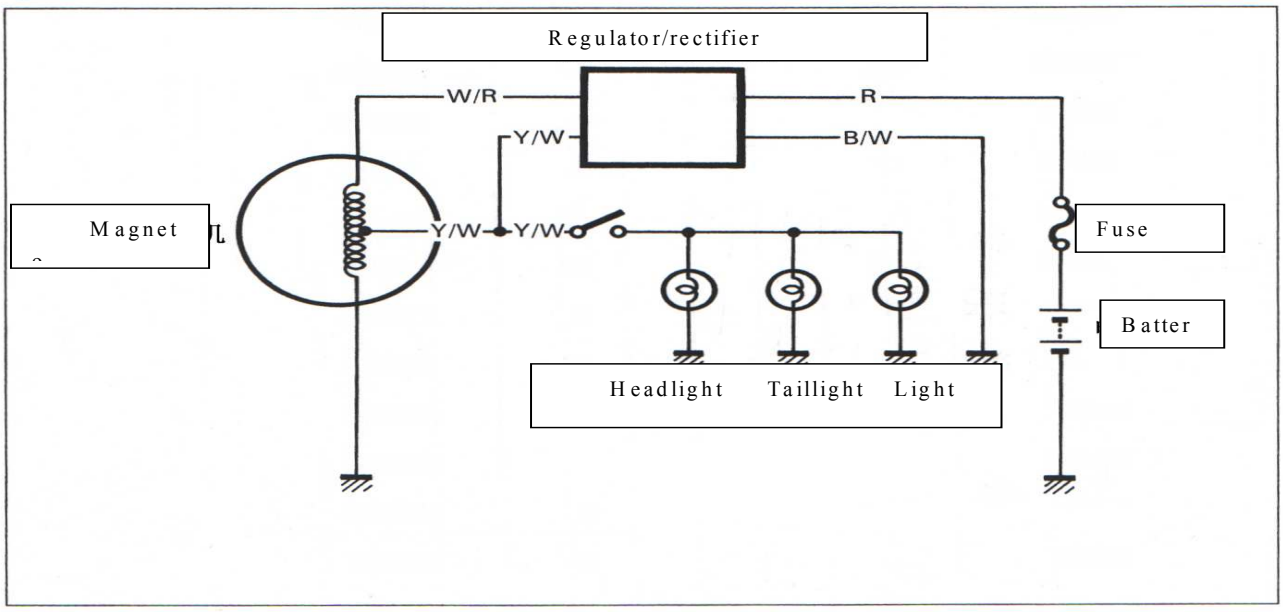

On the other hand, lighting coil supplies AC current to the headlight, taillight, and meter light under the regulated condition.

VENTO MOTORCYCLES

CHARGING OUTPUT CHECKING:

Start the engine and keep it running at 5000 RPM with light switch turned on condition.

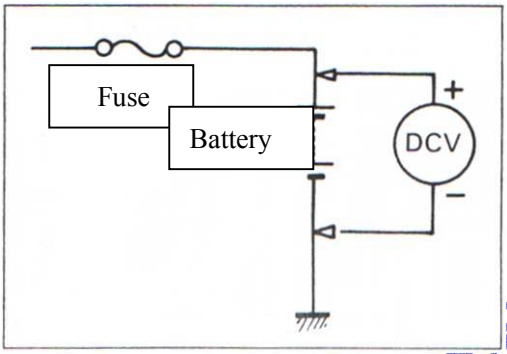

NOTE:
When making the test, be sure that the battery is fully charged condition.

Digital Tachometer: For measuring engine RPM
Specified charging output Voltage□12~14 Volt at 5000 RPM

NO-LOAD PERFORMANCE

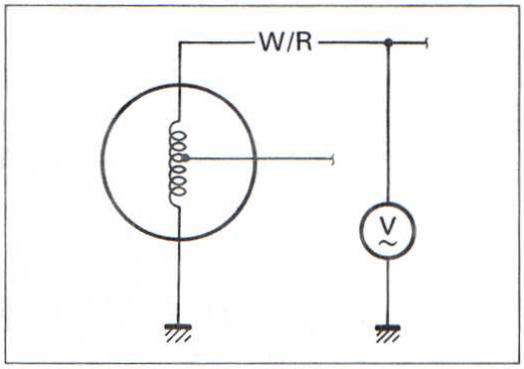

- Disconnect the magneto lead wire coupler.
- Start the engine and keep it running at 5000 RPM.
- Using a Multimeter, measure the AC voltage between the white and red tracer lead wire and ground. If the tester reading is as follows, magneto is in good condition.

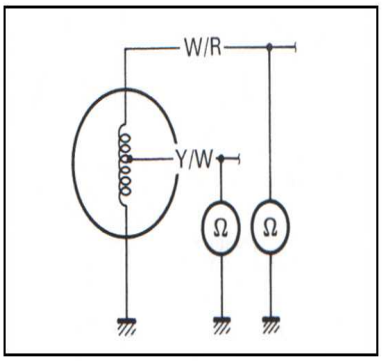

Specified no-load Voltage:

More than 65Volt (AC) AT 5000 RPM.

STATOR COILS RESISTANCE VALUE

Coil Description	Resistance Value
Charging Coil	285 to 375 Ω
Pick-up Coil	120±20 Ω at 20°C
Light Coil	Less than 2 Ω
Battery Charging Coil	Less than 2 Ω

Use Multimeter tester to measure the resistance between the lead wire and ground. If the checked resistance is incorrect, replace the coil.

Regulator / rectifier

Disconnect the lead wire coupler.

Using the Multimeter□×1 Ω Range□, measure the resistance between the terminals as shown in the following table. If the resistance checked is incorrect, replace the regulator/rectifier.

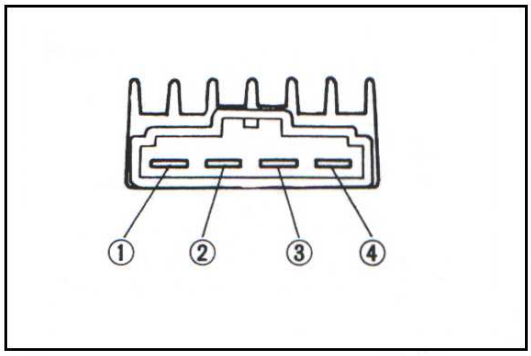

UNIT: Ω

	①	②	③	④
①		10—100	∞	∞
②	10—100		∞	∞
③	∞	∞		5—30
④	∞	∞	∞	

STARTER SYSTEM

DESCRIPTION

The starter system is shown in the diagram below namely, the Starter Motor, Relay, Starter switch and Battery. Depressing the starter button while squeezing the front or rear brake lever energizes the relay, causing the contact points to close, which connects the starter motor to the battery.

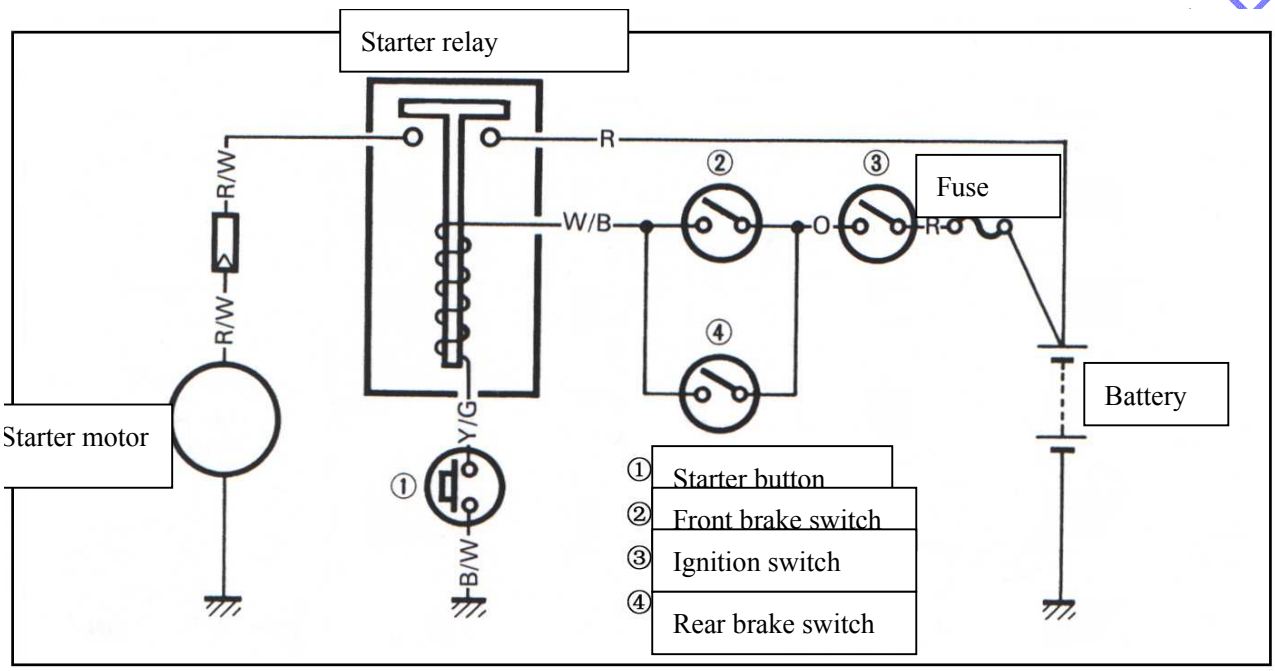

Starter motor removal and disassembly:

Remove the starter motor; disassemble the starter motor as shown in the illustration

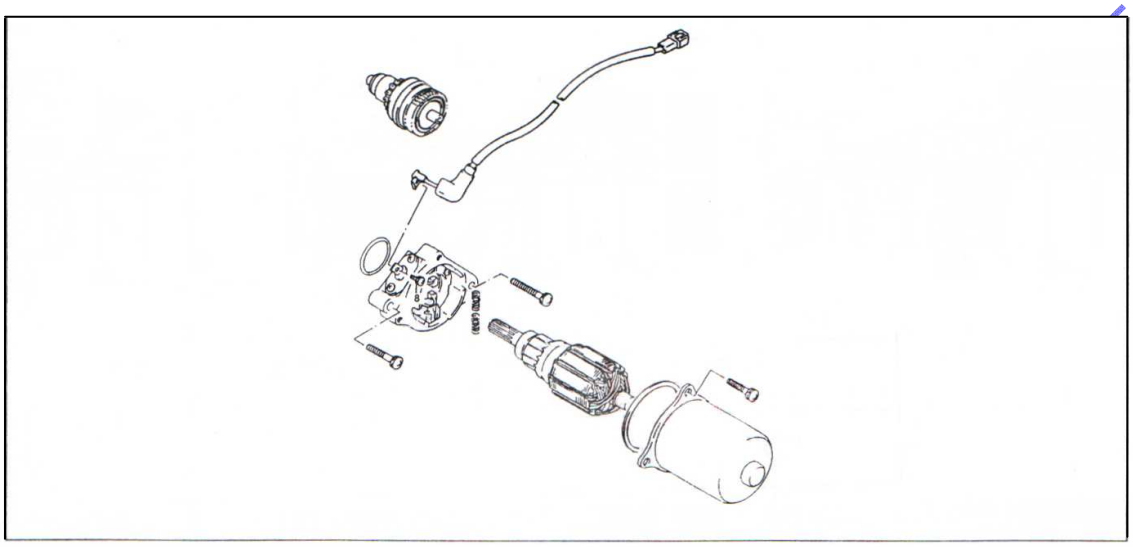

STARTER MOTOR INSPECITION

CARBON BRUSHES

When the brushes are worn, the motor will be unable to produce sufficient torque, and the engine will be difficult to turn over. To prevent the, periodically inspect the length of the brushes and replace them when they are too short or chipping.

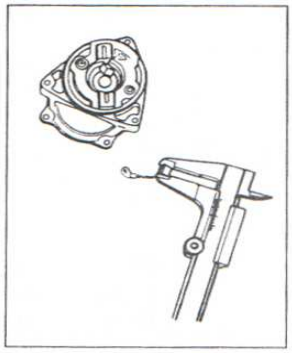

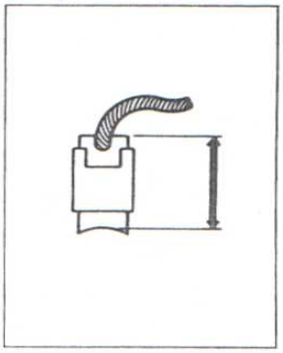

Service Limit□3.5mm (0.14in)

Commutator

If the commutator surface is dirty, starting performance will decrease. Polish the commutator with #400 or similar fine emery paper when it is dirty.

Service Limit□0.2mm (0.008in)

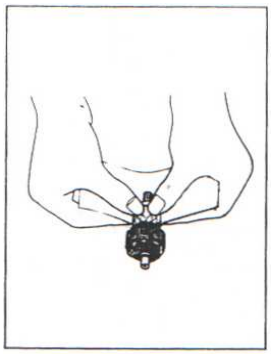

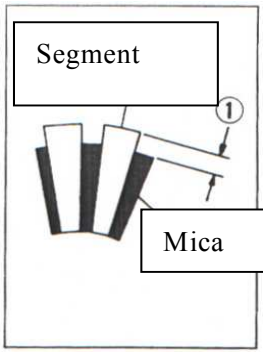

ARMATURE COIL

Using the Multimeter, check the coil for open and ground by placing probe pins on each commutator segment and rotor core and on any two segments at various places. With the brushes lifted off the commutator surface. If the coil is found open-circuited or grounded, replace the armature.

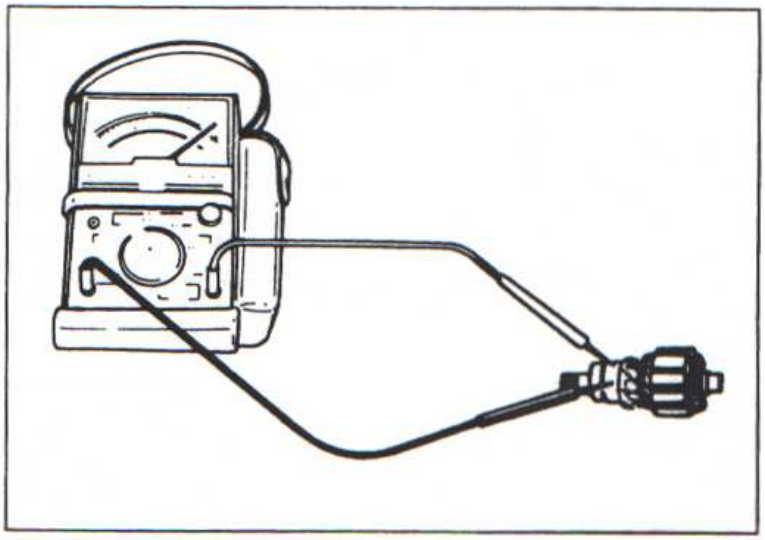

STARTER RELAY INSPECTION

- Disconnect lead wire (R/W) of the starter motor. Turn on the ignition switch and squeeze the front or rear brake lever, and then inspect the continuity between the Red and Red/White lead wires at the starter relay when pushing the starter button.

  If the starter relay is in sound condition, continuity is found.

- Disconnect the starter relay lead wire coupler.

Check the coil for "open", "ground" and ohmic resistance. The coil is in good condition, if the resistance is as follows:

STANDARD RESISTANCE: *80~150 Ω*

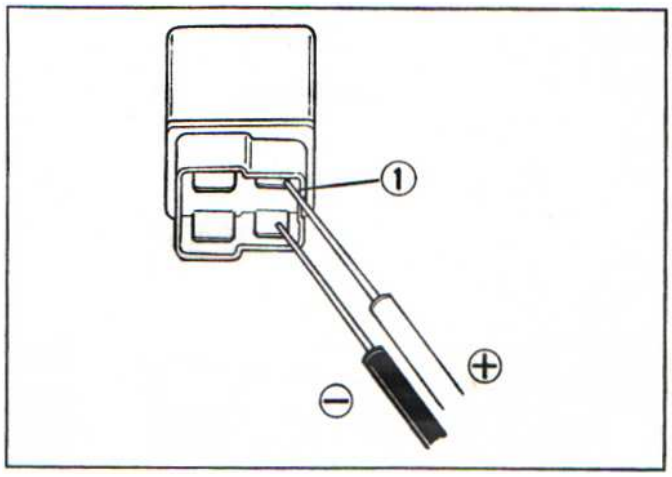

FUEL LEVEL GAUGE

INSPECTION OF FUEL LEVEL GAUGE

The two different checks to be used for inspection of fuel level gauge.

The first and simplest test will tell if the meter is Operating but will not indicate the meters accuracy throughout the range. To perform the test, lift the seat and remove the right frame cover, then disconnect the B/W and Y/B lead Connector of the fuel gauge-sending unit. Connect a jumper Wire between B/M and Y/B wires coming from the main wiring harness, the ignition switched ON, the fuel meter should indicate"F".

The second test will check the accuracy of the meter in the full and empty positions.Connect a 90-ohm resistor between the Y/B and B/W lead wires.The fuel meter is normal if it's pointer indicates the E(empty) position when the specified voltage is applied to the circuit and if it's pointer indicates the F(full) position when the resistor is changed to 10 ohms.If either one or both indications are abnormal,replace the fuel gauge with a new one.

FUEL GAUGE SENDING UNIT INSPECTION

Disconnect the lead wires coming out of the fuel gauge and check resistance of each position. If the resistance measured is incorrect, replace the fuel gauge assembly with a new one.

Resistance is shown in the following table:

FLOAT POSITION	RESISTANCE
F□FULL□	Approx.33 Ω
(HALF)	Approx.200 Ω
E□EMPTY□	Approx.300 Ω

OIL LEVEL SWITCH INSPECTION

Check the oil level switch for continuity between the lead wires. If the tester does not show the value of 1 ohm when the switch ring is in bottom position, file the contact surface or replace the unit.

SIGNAL SYSTEM:

The same bulb is used for both oil levels check light and turn signal indicator light. The circuit diagram is shown below. When the oil level has fallen to a certain level (the remaining amount of oil has become approximately 160 ml, the oil level check light turns on and remains lit. When the turn signal switch is turned on and the turn signal light flashes, the turn signal indicator light (oil level check light) also flashes, both being not concurrently but alternatively as one being lit white the other unit. (pl refer electric diagram below)

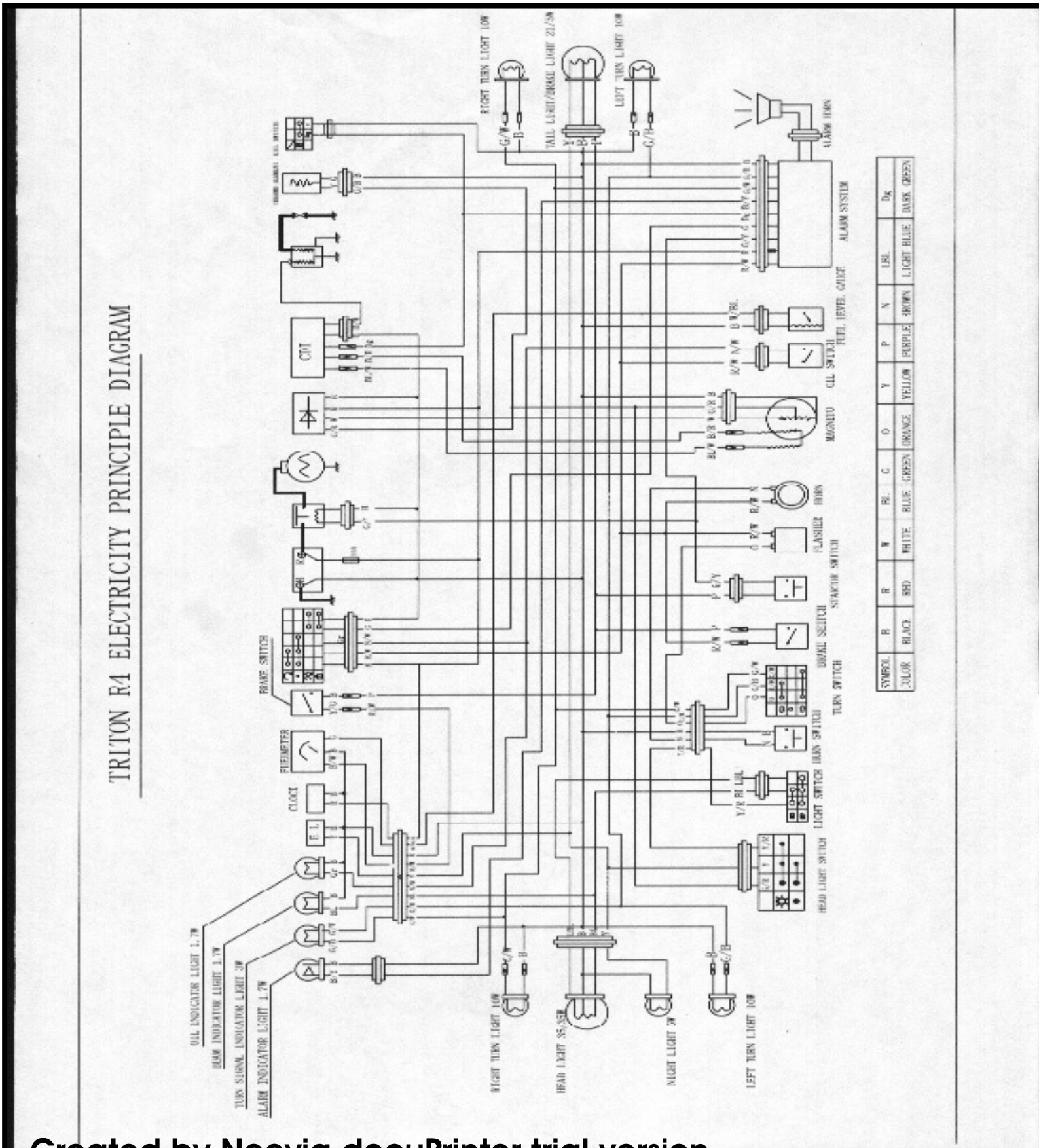

SWITCHES

MAIN SWITCH

	RED	R/W	PINK	BLACK
ON	●	●		
OFF			●	●
LOCK			●	●

NEUTRAL SWITCH

	GRAY	BLACK
ON	●	●
OFF	●	●

TRANS-LIGHT SWITCH

	B	LB	Y/R
high beam	●		●
low beam		●	●

FRONT/REAR BRAKE LIGHT SWITCH

	R/W	PURPLE
ON	●	●
OFF		

TRANS-DIRECTION SWITCH

	O	G/B	G/W
L	●	●	
R	●		●

HORN SWITCH

	R/W	BROWN
ON	●	●
OFF		

LIGHGING SWITCH

	G/R	Y/R	YELLOW
OFF			
diplight	●		●
headlight	●	●	●

STARTER SWITCH

	G/Y	PURPLE
ON	●	●
OFF	●	●

BATTERY

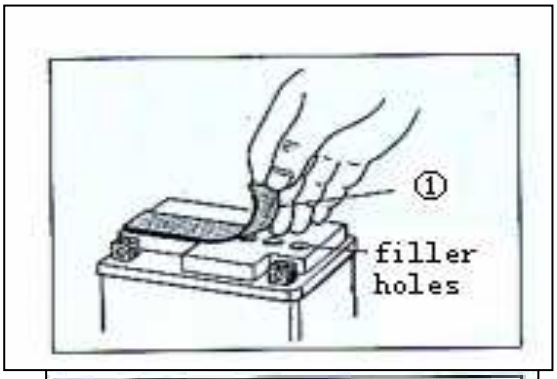

- Open the battery cap ①

- Remove the electrolyte cap ②.

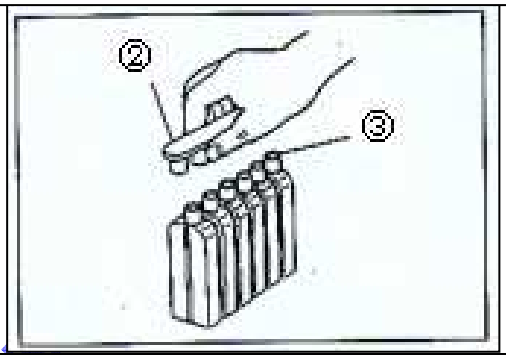

NOTE

- After filling the electrolyte completely, use the removed Cap ② as the sealed caps of battery-filler holes.

- Do not remove or pierce the sealed areas ③ of the electrolyte container.

- Insert the nozzles of the electrolyte container into the battery's electrolyte filler holes, holding the container firmly so that it does not fall. Take precaution not to allow any of the fluid to spill.

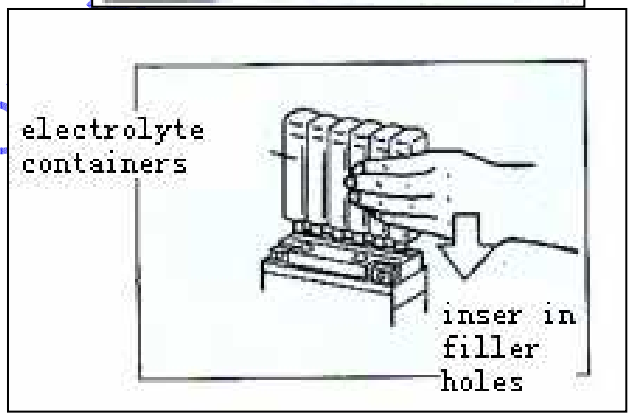

- Make sure air bubbles are coming up each electrolyte container, and leave in the position for about more than 20 minutes.

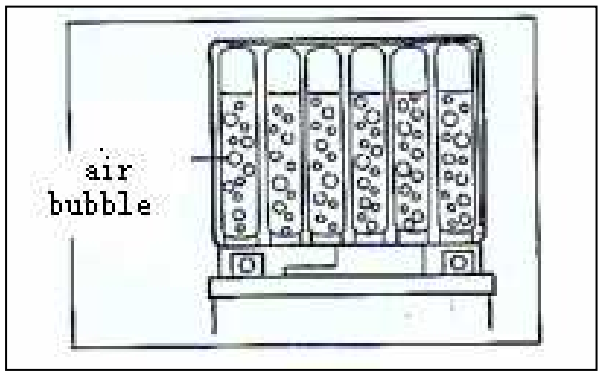

NOTE:
If no air bubbles are coming up from a filter port, tap the bottom of the two or three times.
Never remove the container from the battery.

- After confirming that the electrolyte has entered into the battery completely, remove the electrolyte containers from the battery, wait for around 25 minuets.

- Insert the caps into the filler holes, pressing in firmly so that the top of the caps does not protrude above the upper surface of the battery's top cover.

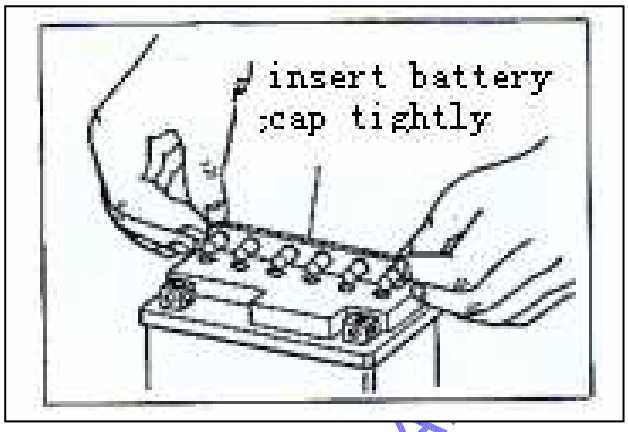

CAUTION:

- Always use specified things of the battery.
- Once install the caps to the battery; do not remove the caps.

- Check battery voltage by multimeter if battery voltage less than the specified voltage (12.5~12.6 Volt). Charge the battery with a battery charger.

SERVICING:

Visually inspect the surface of the battery container. If any sign of cracking or electrolyte leakage from the sides of the battery have occurred, replace the battery with a new one. If the battery terminals are found to be coated with rust or an acidic white powdery substance, then this can be cleaned away with sandpaper.

RECHARGING OPERATION

Apply multimeter to measure the voltage of battery. If the reading is below 12.0V□it should be recharge with a battery charger.

NOTE: When recharging, remove the battery form the vehicle.

NOTE: When recharging, don't remove the sealing caps from the battery.

Recharging Current &Time□

0.4Amp charging current for 5 hours OR 4.0Amp charging current for 1 hour for quick charging.

NOTE 1 The charging current should be not more than 4Amp at any time.

NOTE 2. Quick charging of battery will reduce the battery life.

CAUTION:

- *After recharging, wait for more than 30 minutes and re-check battery voltage by multimeter.*
- *If the battery voltage is less than12.5 Volt, please recharge the battery again.*
- *If battery voltage is still less than 12.5Volt□please replace the battery with a new one.*
- *When the motorcycle is not used for a long period, check the battery every one-month to prevent the battery discharge.*

CHAPTER 6

CHASSIS

CONTENTS

SIDE COVER REMOVAL

1. Remove seat and helmet box by opening seat and by opening of 4 nos bolts.
2. Open the screws 2,3,4, 5,6,7 and remove decorati carrier.

3. Unlock fuel tank cap and remove it, open two tapping screws and then remove side cover.

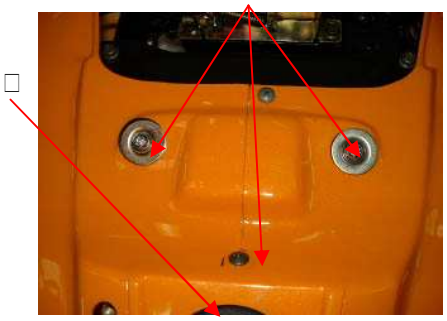

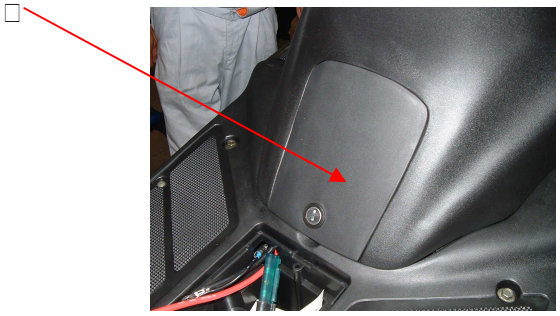

4. The sequence of assembly is the reverse of removal.

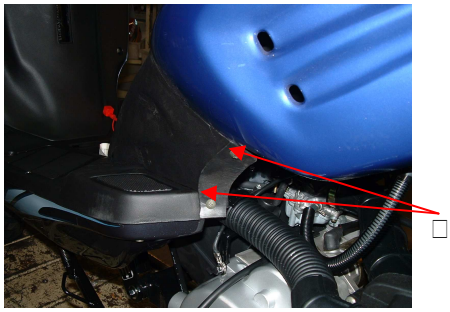

UNDER COVER REMOVAL

1. Open the screws as sequence of illustration.
2. Removing under cover by loosing the left and right tapping screws.

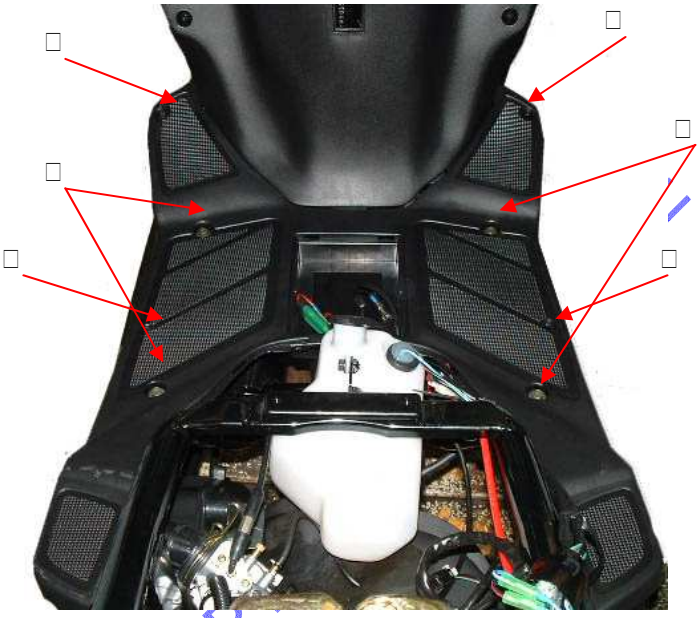

.

Under cover assembly

3□The assembly sequence is the reverse of disassembly.

.

Front cover removal

1□Unscrew tapping screw①, and remove front cover② by removing front cover screw③.

LEGSHIELD REMOVAL

1. Remove power lock housing ② and open bolt ①.

3. Remove leg shield by opening the four bolts ③

4. The assembly sequence is the reverse of disassembly.

HANDLE COVER REMOVAL

a) Remove front handle cover ② by unscrewing the six Tapping screws①

1. Remove master cylinder by removing the two bolts ③

b) Disconnect throttle cable ③ and oil pump cable ④.

c) Remove rear brake cable adjusting nut ⑤

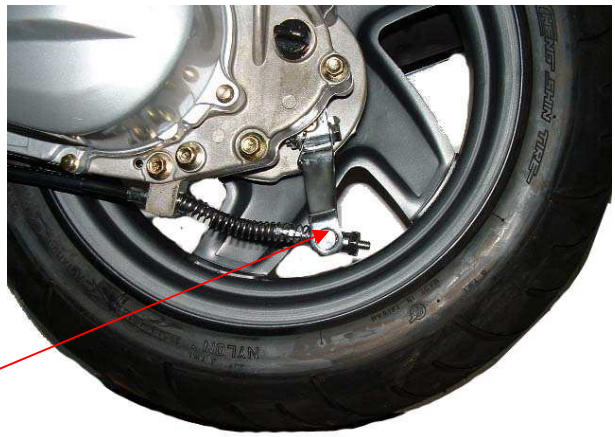

Handle cover removal

5. Remove all wiring couplers.

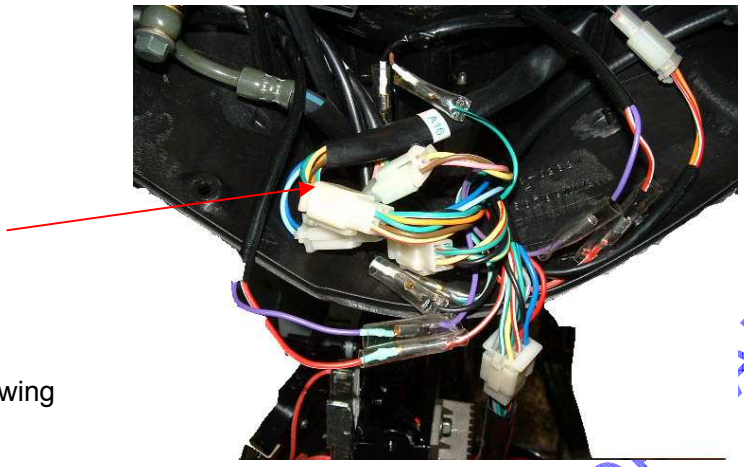

6 Remove handle cover by unscrewing bolt 6

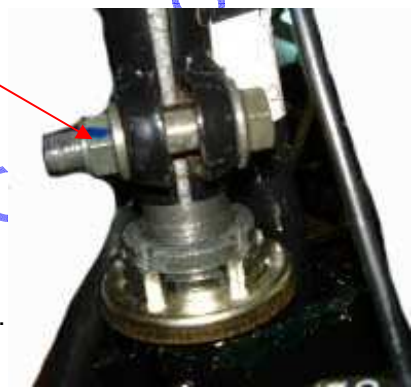

7. The assembly sequence is reverse of removal sequence.

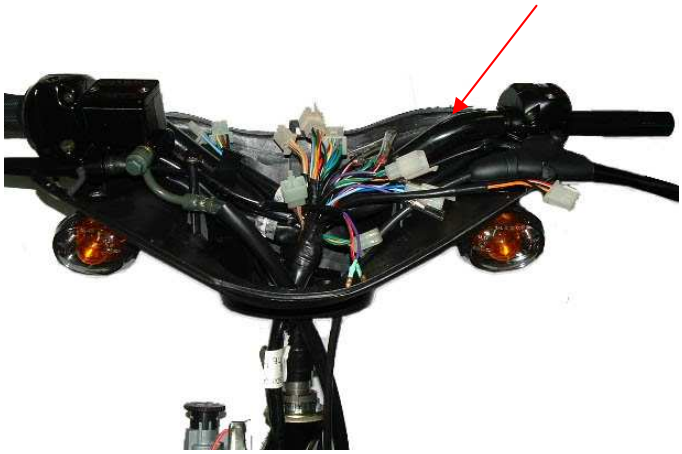

FRONT WHEEL

1. Front rim
2. Middle bushing
3. Oil seal
4. Coller bearing GB6201-2RS
5. Tire
6. valve
7. Nut GB6817
8. Front shaft
9. Front wheel left bushing
10. Speedometer gear
11. valve cap

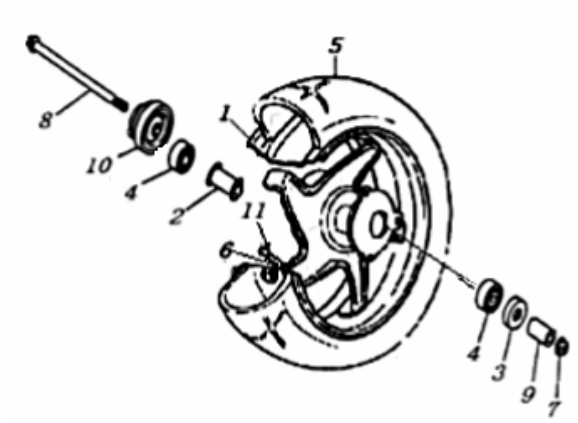

Disassembly

- Remove the front brake caliper② by removing the two mou bolts ①&③

NOTE□Do not operate the front brake lever while dismounting the caliper.

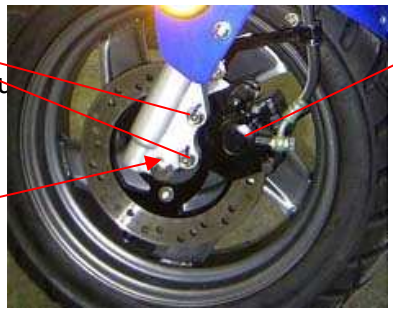

- Remove the left & right decorating cover.

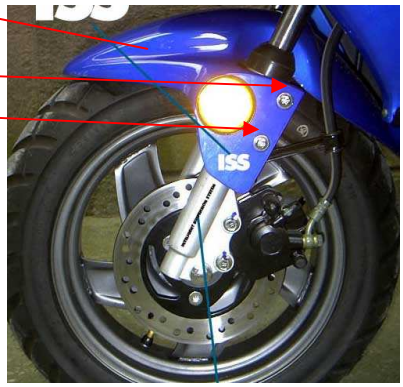

- Remove front fender ⑥
- Support the scooter on jack or wooden shelf.
- Remove front wheel by removing front axle shaft.

INSPECTION AND DISASSEMBLY

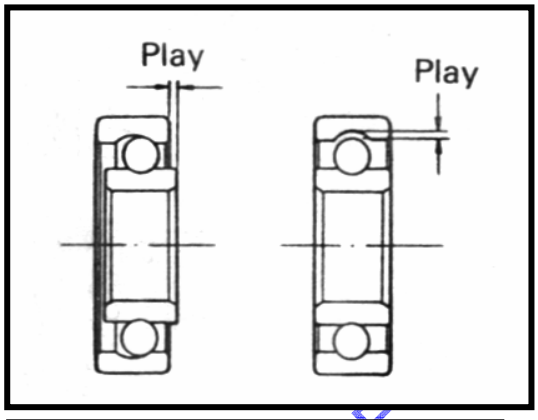

WHEEL BEARING
Inspect the play of bearing inner ring by hand while mounted in the wheel.
Rotate the inner race by hand to inspect if any abnormal noise Occurs or rotating smoothly.
Replace the bearing if abnormal
Remove the dust seal.
CAUTION:
The removed dust seal and bearing should be replaced with new ones.

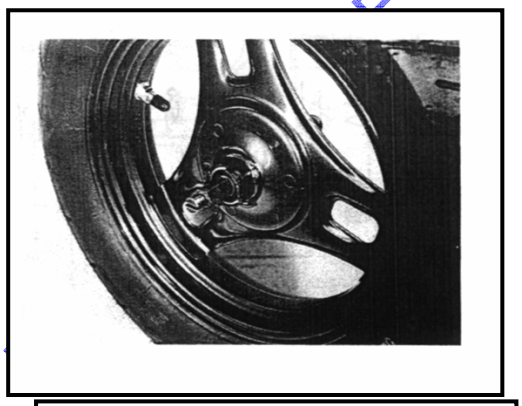

AXLE SHAFT
Check the axle shaft run out with a micrometer and replace it if the run out exceeds the limit.

Service limit:0.25mm (0.010in)

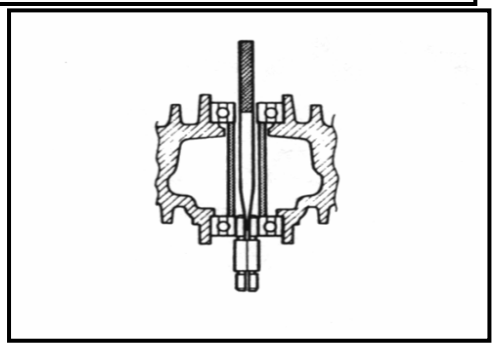

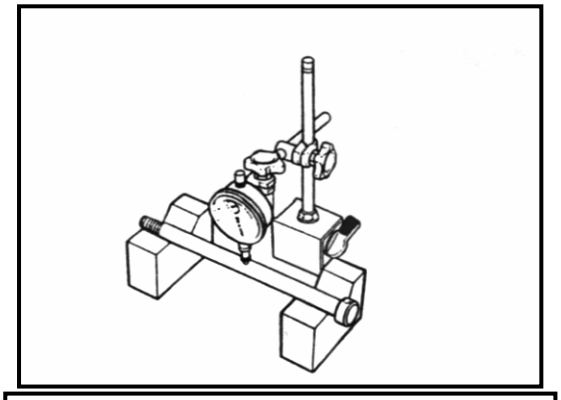

WHEEL RIM
Make sure that the wheel rim run out does not exceed the service limit when checked as shown.
An excessive run out is usually due to worn or loose wheel bearings and can be reduced by replacing the bearings.If bearing replacement fails to reduce the runout,replace the wheel.

Service Limit: 2.0mm (0.08in)

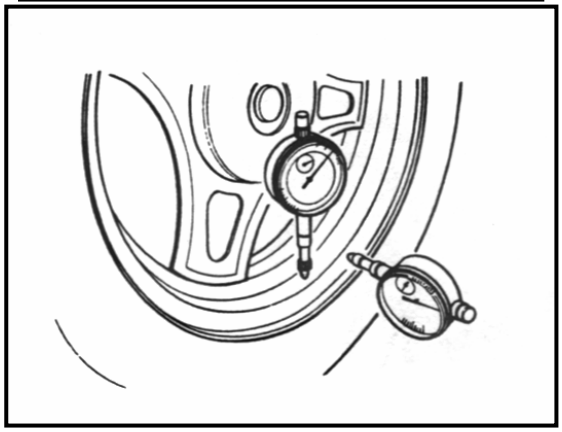

FRONT WHEEL REASSEMBLY

Reassemble and remount the front wheel in the reverse order of removal, and also carry out the following steps:

- Install the wheel bearing with the special tools.

CAUTION: Install the wheel bearing for left side..

- Install the brake disc as shown in photo.

- When installing this speedometer gear box, align the two driving poles with the two reaxes of the wheel hub.
- Tighten the nut with special tool.

FRONT BRAKE SYSTEM

1. Disc brake assy.
2. Disc brake handle lever
3. Tightening bolt
4. Nut M6
5. Master cylinder
6. Tightening seat
7. Bolt M6X23
8. Brake hose assy.
9. Brake caliper
10. Connecting board tightening bolt
11. Hose mounting bolt
12. Seal gasket
13. Front gasket
14. Gear gasket
15. Brake pad 1
16. Brake pad 2
17. Front brake switch
18. Brake disc

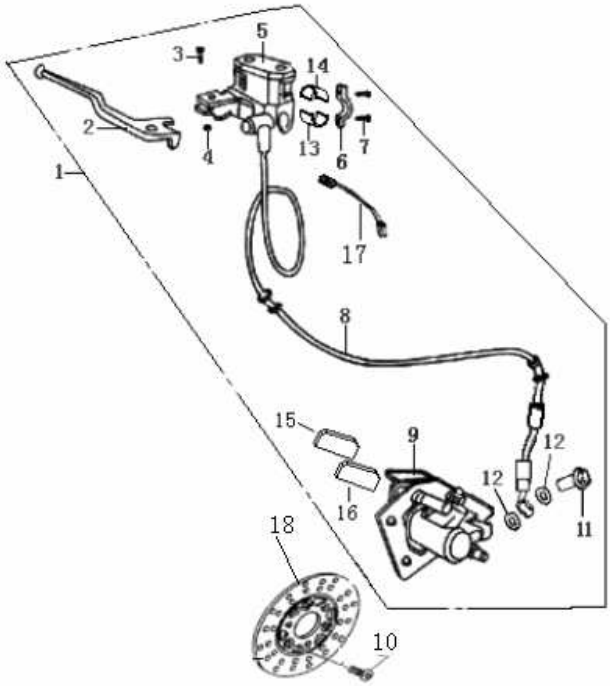

BRAKE PAD REPLACEMENT

Remove the calliper by removing the mounting bolts ① .

NOTE:

Do not operate the front brake lever while dismounting the calliper.

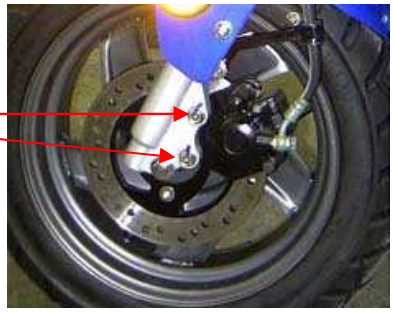

Brake pads Removal

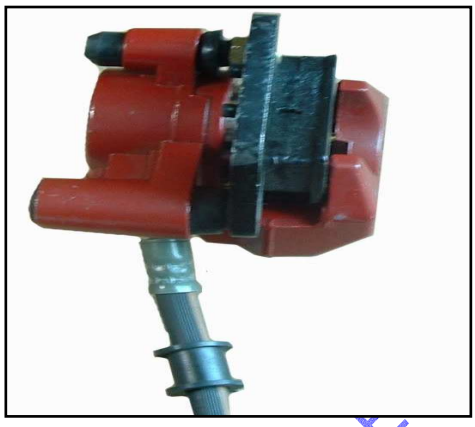

CAUTION:
Replace the brake pads as a set, otherwise braking performance Will be adversely affected.

Reassemble and remount the calliper.

CALIPER REMOVAL AND DISASSEMBLY
Remove the brake hose and collect the brake fluid in a suitable receptacle.
CAUTION:
Never re-use the brake fluid left over from the last servicing And stored for long periods.

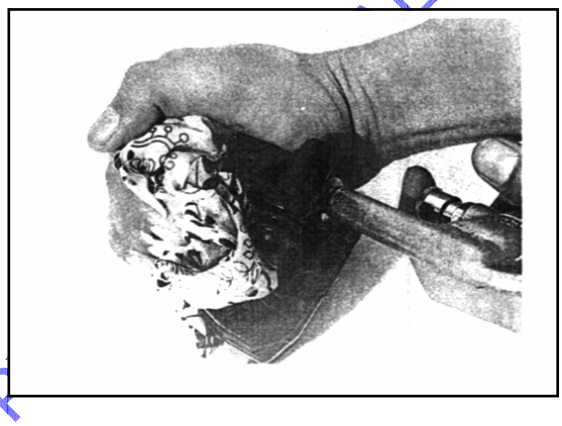

- Remove the calliper.
- Remove the brake pads.
- Remove the spring and pad holder.

- Place a rag over the piston to prevent popping up.Froce out the piston with a air gun.

CAUTION:
Do not use high pressure air to prevent piston damage.

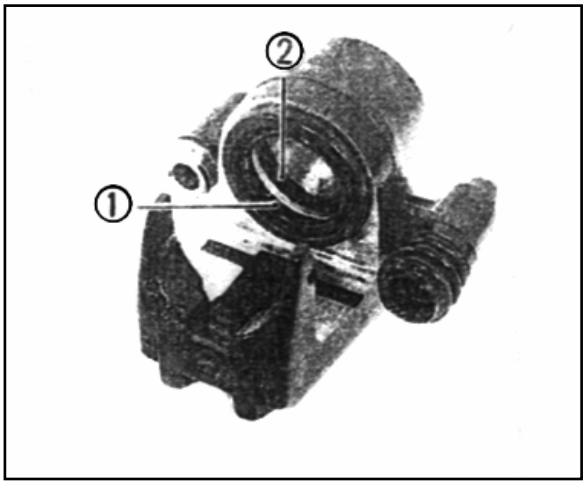

- Remove the dust seal □ and piston seal □.

CALIPER AND DISC INSPECTION

Inspect the calliper cylinder bore wall or nicks, scratches or Other damage.
Check piston for damage and wear.

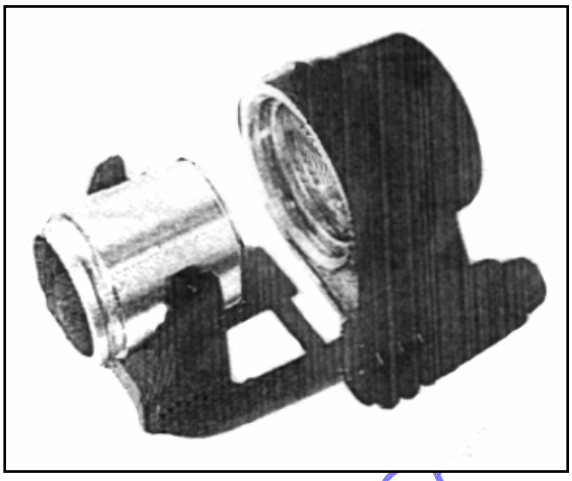

Check carefully each rubber parts for damage and wear.

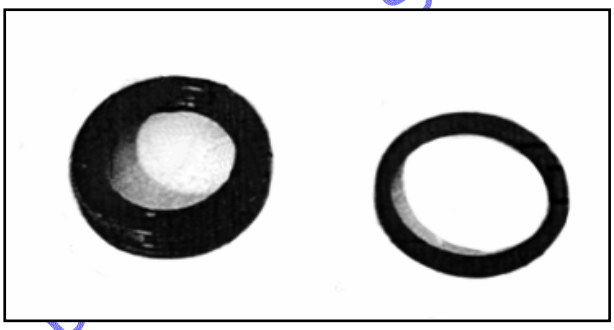

Check the disc for wear with a micrometer. Its thickness can be checked with disc and wheel in place. Replace the disc if the Thickness exceeds the service limit.
Service Limit: 3.5 mm (0.14 in)

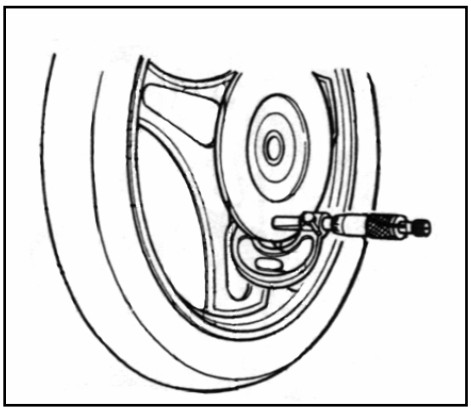

With the disc mounted on the wheel, check the disc face for runout with a dial gauge as shown.
Replace the disc if the run out exceeds the service limit.
Service Limit: 0.3 mm(0.012 in)

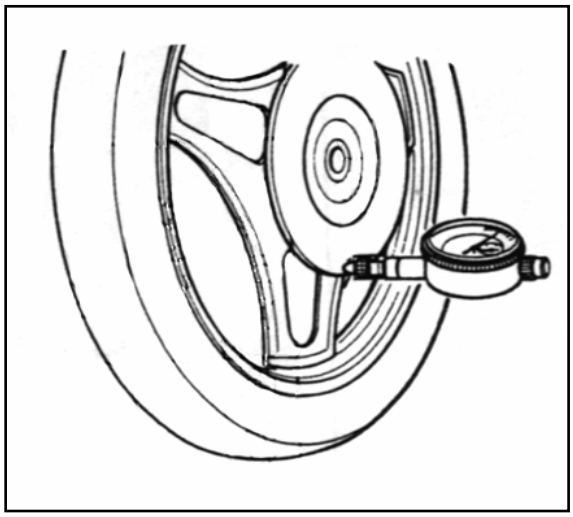

BRAKE CALIPER REASSEMBLY

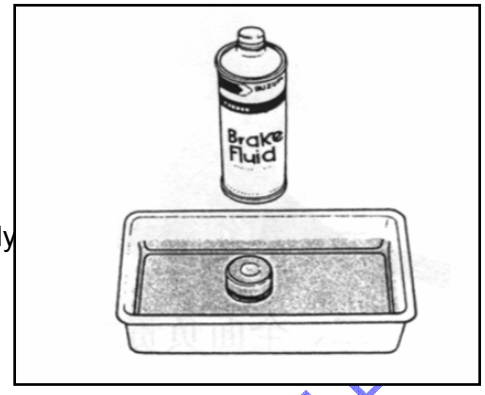

Reassemble and remount the calliper in the reverse order of removal and disassembly, and also carry out the following steps.
CAUTION:
Wash the calliper components with fresh brake fluid before reassembly. Never use cleaning solvent or gasoline to wash them. Apply brake fluid to the calliper bore and piston to be inserted into the bore.

WARNING:
Bleed air after remounting the calliper. (refer to above pages)

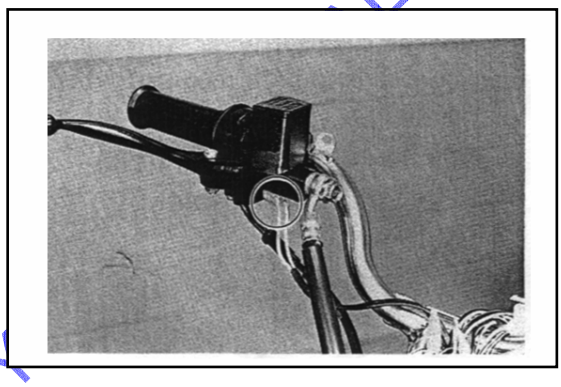

MASTER CYLINDER REMOVAL AND DISASSEMBLY
Remove the handlebar cover. (Refer to above page)
Disconnect the front brake light switch lead wires.

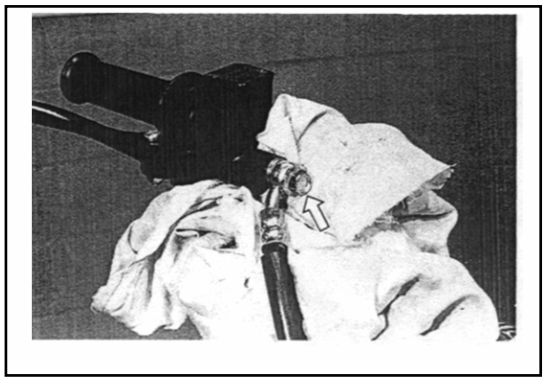

Place a cloth underneath the union bolt on the master cylinder to collect spilled drops of brake fluid. Unscrew the union bolt and disconnect the brake hose master cylinder joint.

CAUTION:
Completely wipe off any brake fluid adhering to any part of motorcycle. The fluid reacts chemically with paint, plastics, rubber materials, etc.

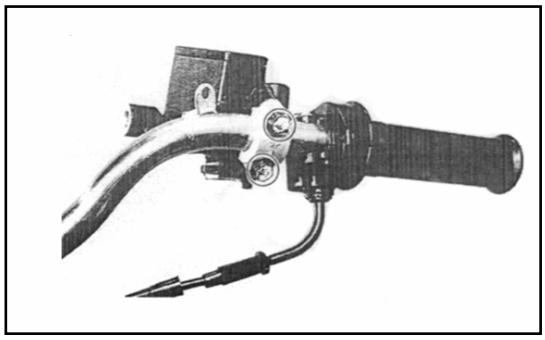

- Remove the master cylinder.

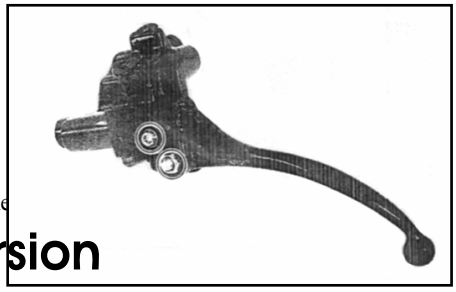

- Remove the brake lever and brake switch.

Remove the dust boot.

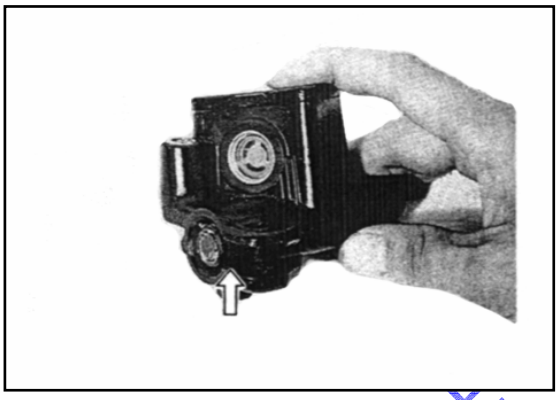

Remove the circlip with the special tool.

- Remove the piston/primary cup with return spring.
  Remove the reservoir cap and diaphragm.
- Drain brake fluid.

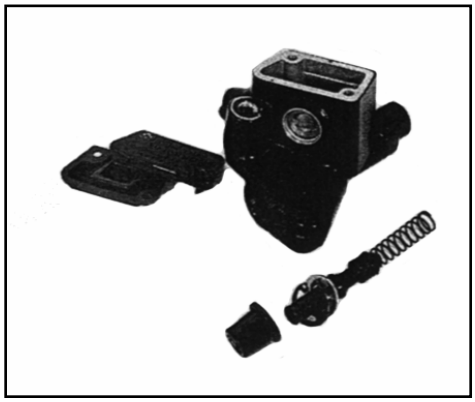

MASTER CYLINDER INSPECTION
Inspect the master cylinder bore for any scratches or other damage.

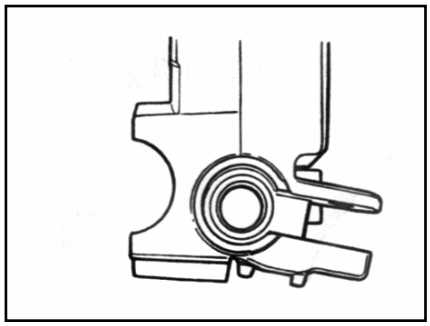

- Check the piston surface for scratches or other damage.
- Check the primary cup and dust boot for wear or damage.

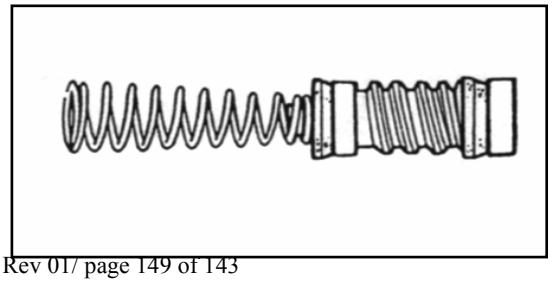

MASTER CYLINDER REASSEMBLY AND ERMOUNTING
Reassemble and remount the master cylinder in the reverse order of Removal and disassembly, and also carry out the following steps.

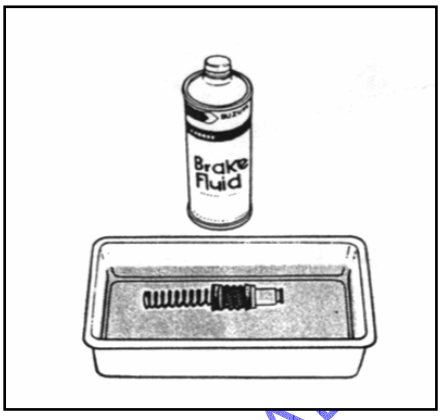

CAUTION:
Wash the master cylinder components with fresh brake fluids before reassembly. Never use cleaning solvent or gasoline to wash them.
Apply brake fluid to the cylinder bore and all the internals to be inserted into the bore.

Reassemble and remount the master cylinder,
When remounting the master cylinder on the handlebar, first tighten the clamp bolt for upside.

CAUTION:
Bleed air after remounting the master cylinder.

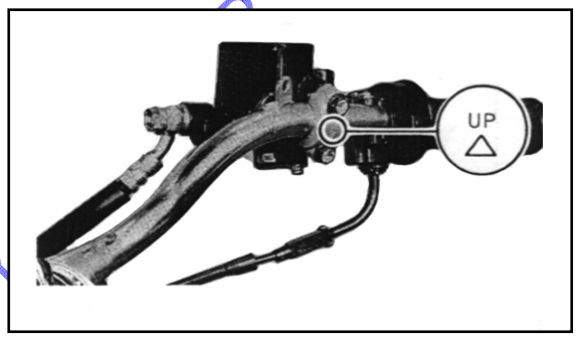

STEERING STEM AND FRONT SUSPENSION

1. Handle jointing assy.
2. Bolt GB5789 M10X1.25X45
3. Nut GB6187 M10X1.25
4. Left handlebar
5. Throttle grip assy.
6. Screw GB818 M5X10
7. Sear brake cable assy.
8. Throttle cable assy.
9. Left switch comp.
10. Right switch comp.
11. Anti-dust cover
12. Steel ball □5
13. Lower outer steel bowl
14. Connecting steel bowl
15. Under connecting board assy.
16. Lower inner steel bowl
17. Bolt GB5789 M10X1.25X30
18. Locknut

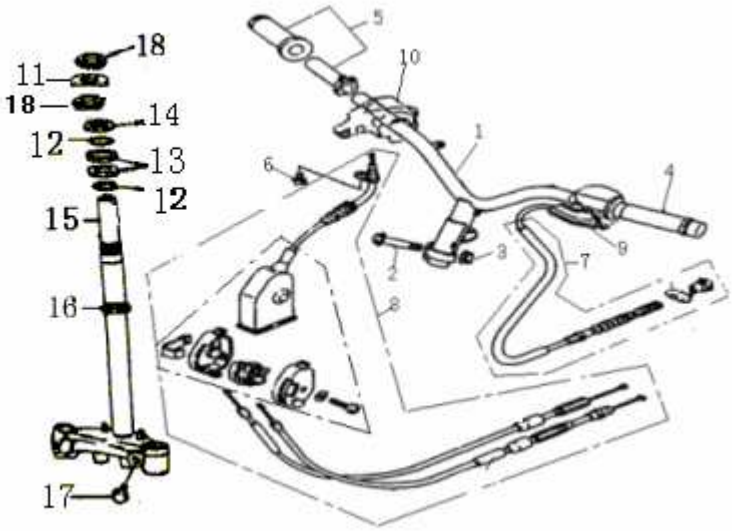

REMOVAL AND DISASSEMBLY

- Remove the handle cover
- Remove under decorating cover
- Remove leg shield
- Remove front wheel
- Disconnect the front and rear brake light switch lead wires ①.
- Remove the rear brake cable ②.
- Remove throttle grip assy ③.
- Remove throttle cable ④.

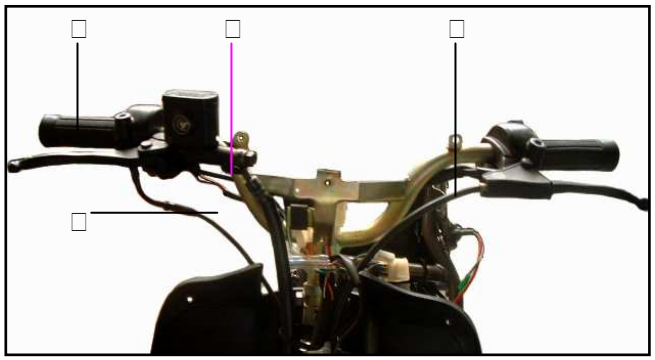

- Remove disc brake system by unscrewing tightening bolt.

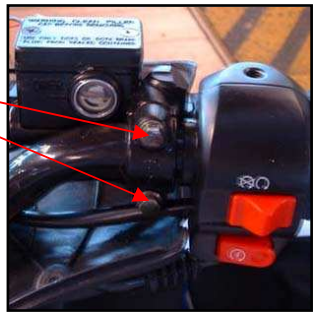

- Remove handle by removing tightening bolt

- Unscrew locknut with special tool

- Remove front fork assy. by removing upper outer steel bowl

NOTE:
Keep the steering stem balls safely.

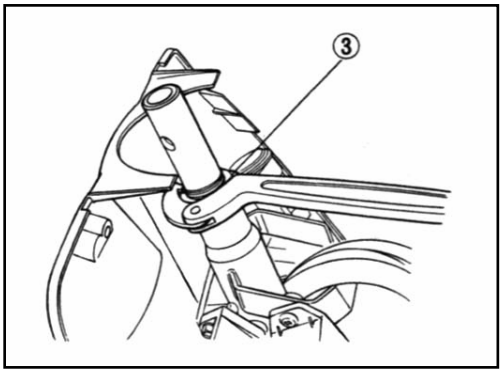

- Remove front fork

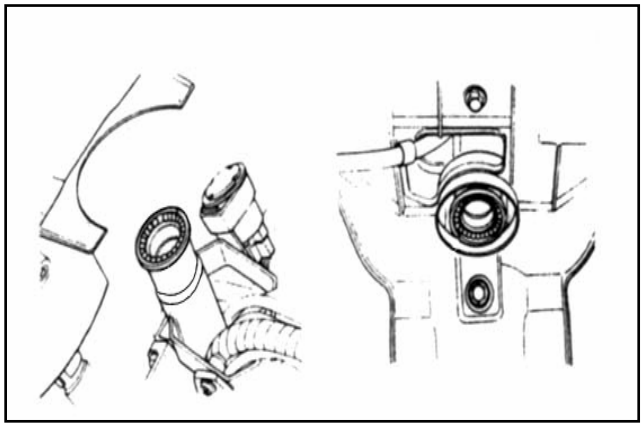

- Remove bearing lower race by special tool.
- Remove steel balls.

Number of steel balls
Upper 21
lower 21

- Remove the upper and lower bearing inner races with an appropriate bar

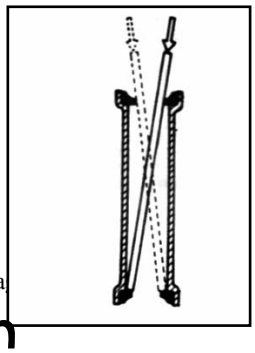

INSPECTION

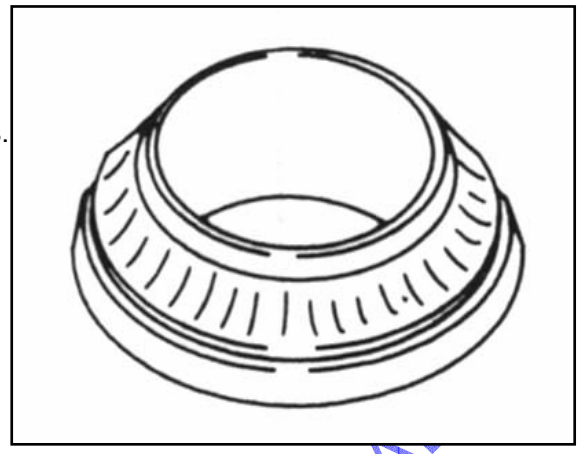

- Check the removed parts for the following abnormalities.
  - Bearing race wear and brinelling.
  - Worn and damaged steel balls.
  - Distortion of steering stem or handlebar.

- Check the suspension for damage

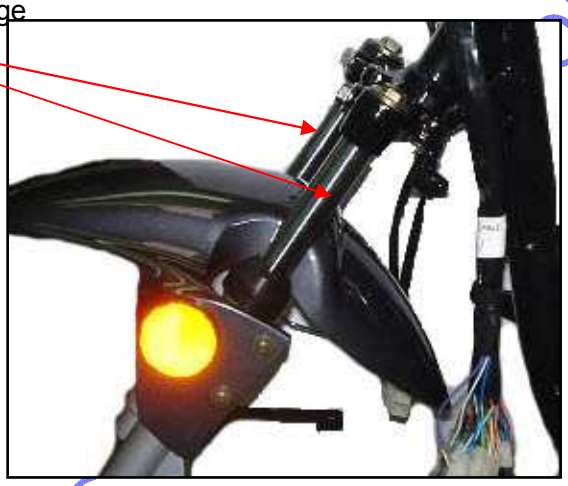

Reassembly and remounting

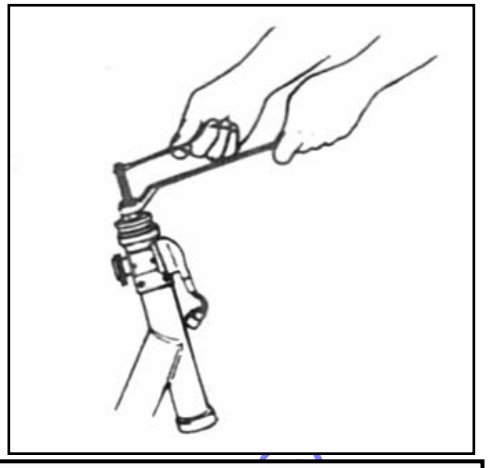

Reassemble and remount the steering stem, handlebar and front fork in the reverse order of disassembly and removal, and also carry out the following steps.

Install the right left suspension arms.

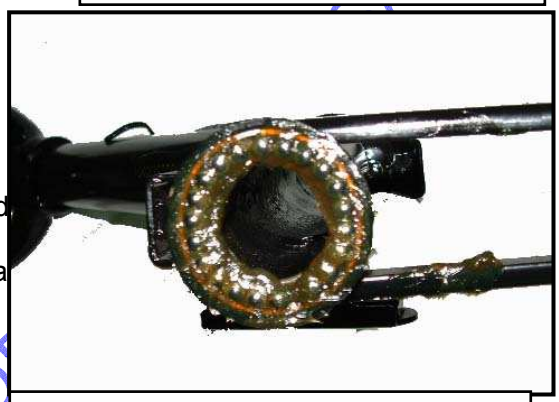

Steel ball

Apply grease when installing the upper and lower steel balls.

QTY□upper □21

lower □21

Tighten the steering outer race with special tool, and then extrud
1/8-1/4round.
NOTE□adjustment will vary from scooter to scooter. Be sure tha
left to right.

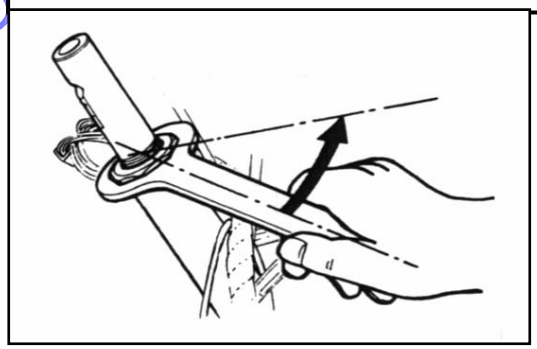

- Install a locknut by installing locknut and anti-dust cover

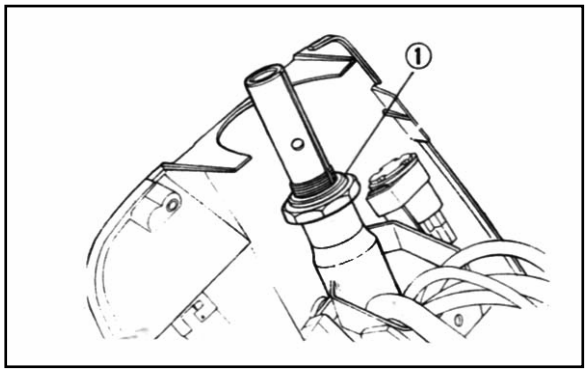

- Screw locknut with special tool, and adjust front fork bearing to get smooth turning.

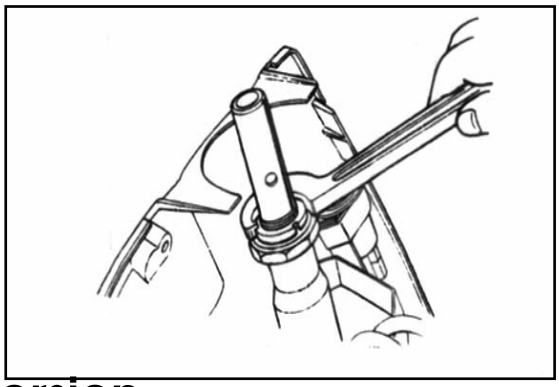

- Install handlebar and tighten the bolt to the specified torque.

Torque :37-44N.M

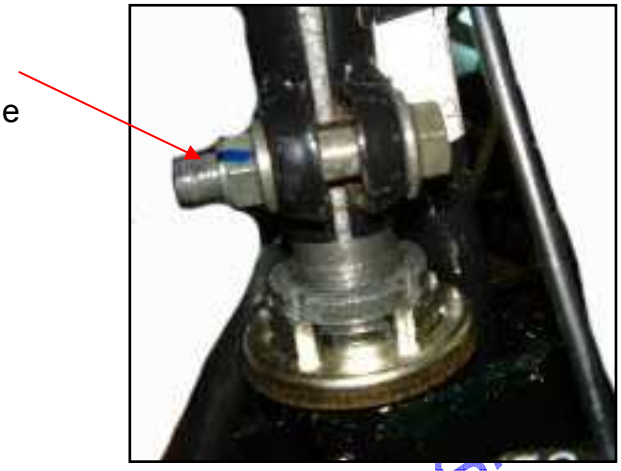

NOTE:

After performing the adjustment and installing the handlebar, Rock the front wheel forward and backward to ensure that there is not play and that the procure is accomplished correctly.

If Play is noticeable, readjust the steering outer race nut.

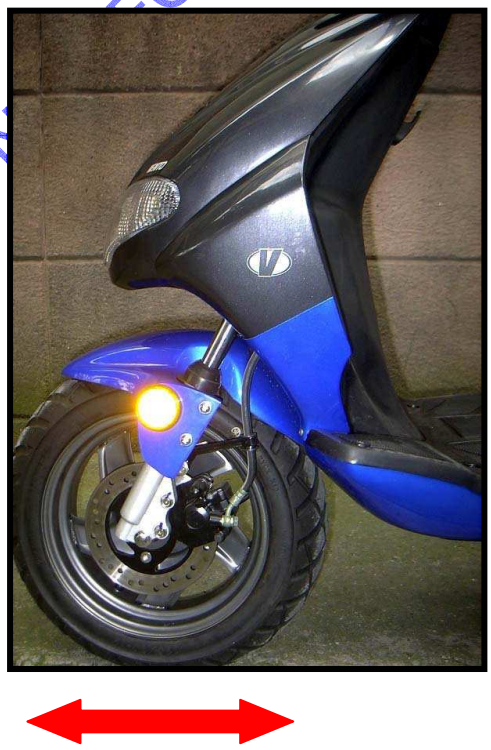

REAR WHEEL AND BRAKE

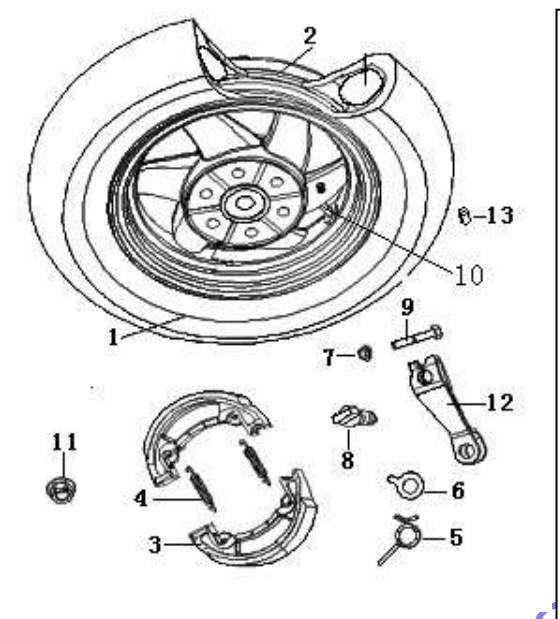

1. Tire 130/70-12
2. Rear rim assy.
3. Brake pad kit assy.
4. Brake pad kit spring
5. Rear brake tension
6. Rear indicator
7. Anti-dust cover
8. Rear brake camshaft
9. Bolt M6X30
10. Valve
11. Nut M16X1.5
12. Rear brake arm
13. Valve cap

REMOVAL

- Place the scooter on level ground.
- Remove muffler.
- Remove rear small fender.
- Remove locknut and rear wheel.
- Remove brake shoes.

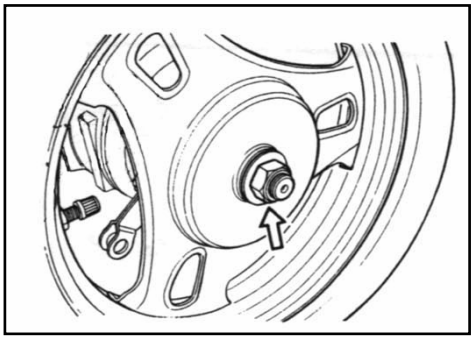

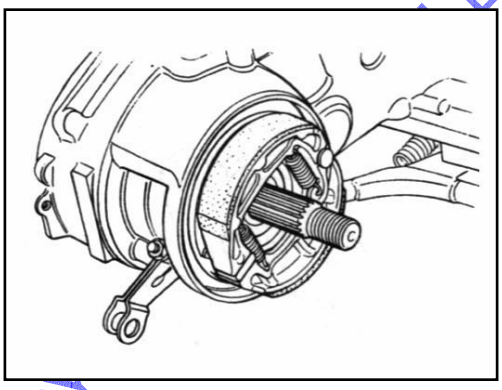

INSPECTION
REAR RIM
Measure inner diameter of rear rim hub with micrometer, if measured diameter exceeds 110.7mm, replace it with a new one.

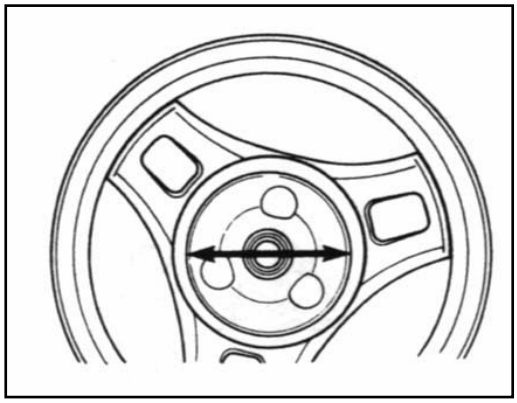

Brake shoes
Check the brake shoe and decide whether it should be replaced or not from the thickness of the brake shoe lining.

Service limit □2.5mm(0.09in)

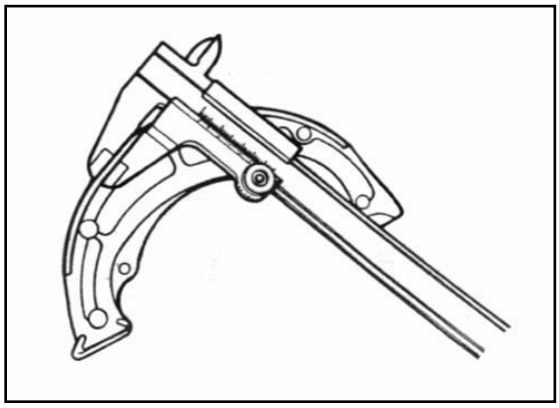

REASSEMBLY AND REMOUNTING

Reassemble and remount the rear wheel and brake in the reverse of removal, and also carry out the following steps:

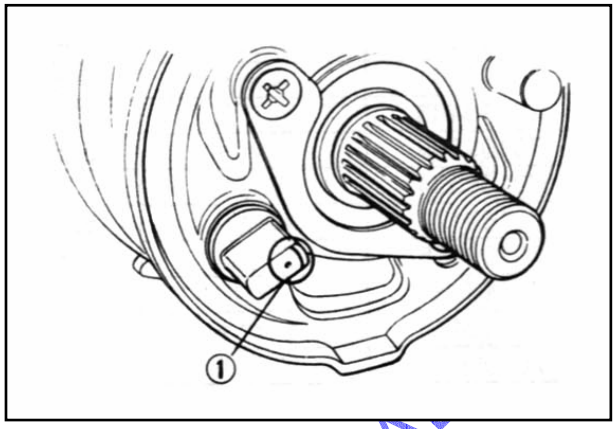

- Turn the punched mark ① on the camshaft to the rear axle shaft side.

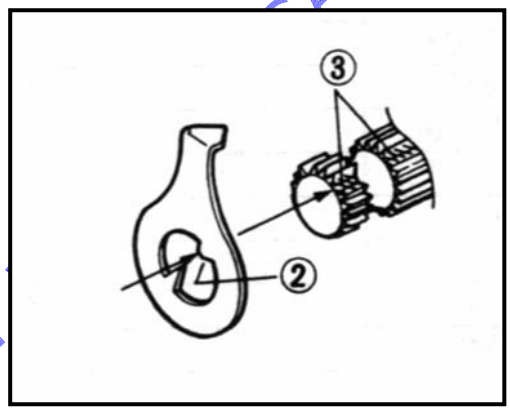

- Install the protrusion ② of indicator plate to the groove ③ Of Camshaft.

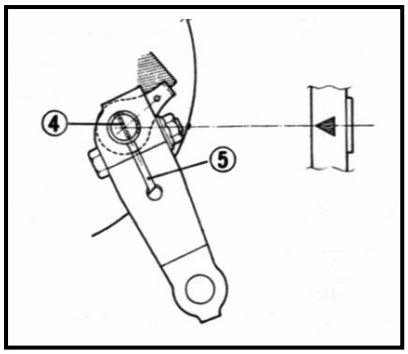

- When installing the brake cam shaft, align the groove ④ of camshaft with the slit ⑤ of on cam shaft.

- When installing brake shoes, be sure to daub camshaft with adequate grease.

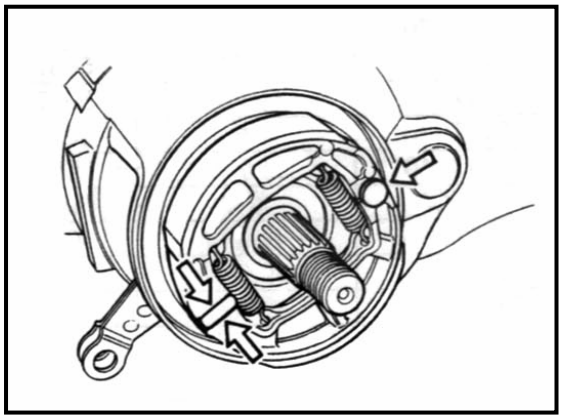

CAUTION:
Be careful not to daub the camshaft with too much grease.
If grease gets on the lining, brake effectiveness will be lost.

SERVICING INFORAMTION

CONTENTS

TROUBLE SHOOTING

ENGINE

Complaint	Symptom and possible causes	Remedy
Engine does not start, or is hard to start.	**Compression too low**	
	1. Excessively worn cylinder or piston rings.	Replace.
	2. Stiff piston ring in place.	Repair or replace.
	3. Gas leaks from the joint in crankcase, cylinder or cylinder head.	Repair or replace.
	4. Damaged reed valve.	Replace.
	5. Spark plug too loose.	Tighten
	6. Broken, cracked or failed piston.	Replace.
	Plug not sparking	
	1. Damaged spark plug or spark plug cap.	Replace.
	2. Dirty or wet spark plug.	Clean and dry.
	3. Defective CDI & ignition coil unit or stator coil.	Replace.
	4. Open or shorten high-tension cord.	Replace.
	5. Defective ignition switch.	Replace.
	No fuel reaching the carburetor	
	1. Clogged hole in the fuel tank cap.	Clean.
	2. Clogged or defective fuel cock.	Clean or replace.
	3. Defective carburetor float valve.	Replace.
	4. Clogged fuel hose or defective vacuum hose.	Clean or replace.
Engine stalls easily.	1. Carbon deposited on the spark plug.	Clean.
	2. Defective CDI & ignition coil unit.	Replace.
	3. Clogged fuel hose.	Clean.
	4. Clogged jets in carburetor.	Clean.
	5. Clogged exhaust pipe.	Clean.
Noisy engine.	**Noise appears to come from piston**	
	1. Piston or cylinder worn down.	Replace.
	2. Combustion chamber fouled with carbon.	Clean.
	3. Piston pin, bearing or piston pin bore worn.	Replace.
	4. Piston rings or ring grooves worn.	Replace.
	Noise seems to come from crankshaft	
	1. Worn or burnt crankshaft bearings.	Replace.
	2. Worn or burnt conrod big-end bearings.	Replace.
	Noise seems to come from final gear box	
	1. Gears worn or rubbing.	Replace.
	2. Badly worn splines.	Replace.
	3. Worn or damaged bearing of drive shaft or rear axle shaft.	Replace.
Slipping clutch	1. Worn or damaged clutch shoes.	Replace.
	2. Worn clutch drum.	Replace.
Engine idles poorly.	1. Excessively worn cylinder or piston rings.	Replace.
	2. Stiff piston ring in place.	Replace.
	3. Gas leaks from crankshaft oil seal.	Replace.
	4. Spark plug gaps too wide.	Adjust or replace.
	5. Defective CDI & ignition coil unit.	Replace.
	6. Defective magneto stator coil.	Replace.
	7. Float chamber fuel level out of adjustment in carburetor.	Replace. Clean or adjust.
	8. Clogged jets in carburetor.	Replace.
	9. Broken or damaged reed valve.	

Complaint	Symptom and possible causes	Remedy
Engine runs poorly in high-speed range.	1. Excessively worn cylinder or piston rings. 2. Stiff piston ring in place. 3. Spark plug gaps to narrow. 4. Ignition not advanced sufficiently due to poorly working CDI & ignition coil unit. 5. Defective magneto stator coil. 6. Float-chamber fuel level too low. 7. Clogged air cleaner element. 8. Clogged fuel hose, resulting in inadequate fuel supply to carburetor. **9.** Clogged fuel cock vacuum pipe.	Replace. Replace. Adjust. Replace. Replace. Adjust or replace. Clean. Clean and prime. Clean.
Dirty or heavy exhaust smoke.	1. Too much engine oil into the engine. 2. Use of incorrect engine oil.	Check oil pump. Change.
Engine lacks power.	1. Excessively worn cylinder or piston rings. 2. Stiff piston rings in place. 3. Gas leaks from crankshaft oil seal. 4. Spark plug gaps incorrect. 5. Clogged air cleaner element. 6. Float-chamber fuel level out of adjustment. 7. Clogged air cleaner element. 8. Fouled spark plug, 9. Sucking air from intake pipe. 10. Slipping or worn V-belt. 11. Damaged/worn rollers in the movable drive face. 12. Weakened movable driven face spring. 13. Too rich fuel/air mixture due to defective starter system.	Replace. Replace. Replace. Adjust or replace. Clean. Adjust or replace. Clean. Clean or replace. Retighten or replace. Replace. Replace. Replace. Replace.
Engine overheats.	1. Heavy carbon deposit on piston crown. 2. Defective oil pump or clogged oil circuit. 3. Fuel level too low in float chamber. 4. Air leakage from intake pipe. 5. Use of incorrect engine oil. 6. Use If improper spark plug. **7.** Clogged exhaust pipe/muffler.	Clean. Replace and clean. Adjust or replace. Retighten or replace. Change. Change. Clean or replace.

CARBURETOR

Complaint	Symptom and possible causes	Remedy
Trouble with starting.	1. Starter jet is clogged. 2. Air leaking from a joint between starter body and carburetor. 3. Air leaking from carburetor's joint's or vaccume hose joint. **4.** Starter plunger is not operating properly.	Clean. Check starter body and carburetor for tightness, and replace gasket. Check and replace. Check and replace.
Idling or low-speed troubles.	1. Pilot jet, pilot air jet is clogged or loose. 2. Air leaking from carburetor's joint, vacuum pipe joint, or starter. 3. Pilot outlet is clogged. 4. Starter plunger is not fully close.	Check and clean. Check and replace. Check and clean. Check and replace.

Complaint	Symptom and possible causes	Remedy
Medium- or high-speed trouble.	1. Main jet or main air jet is clogged. 2. Needle jet is clogged. 3. Fuel level is improperly set. 4. Throttle valve is not operating properly. **5.** Fuel filter is clogged.	Check and clean. Check and clean. Check and replace. Check throttle valve for operation. Check and clean.
Overflow and fuel level fluctuations.	1. Needle valve is worn or damaged. 2. Spring in needle valve is broken. 3. Float is not working properly. 4. Foreign matter has adhered to needle valve. 5. Fuel level is too high or low.	Replace. Replace. Check and adjust. Clean. Adjust and replace.

ELECTRICAL

Complaint	Symptom and possible causes	Remedy
No sparking or poor sparking.	1. Defective CDI & ignition coil unit. 2. Defective spark plug. 3. Defective magneto stator coil. **4.** Loose connection of lead wire.	Replace. Replace. Replace. Connect/tighten.
Spark plug soon becomes fouled with carbon.	1. Mixture too rich. 2. Idling speed set too high. 3. Incorrect gasoline. 4. Dirty element in air cleaner. 5. Spark plug loose. 6. Incorrect engine oil.	Adjust carburetor. Adjust carburetor. Change. Clean. Replace by hot type plug. Replace.
Spark plug electrodes overheat or burn.	1. Spark plug too hot. 2. The engine overheats. 3. Spark plug loose. 4. Mixture too lean. 5. Not enough engine oil.	Replace by cold type plug, Tune up. Retighten. Adjust carburetor. Check oil pump.
Magneto does not charge.	1. Open or short in lead wires, or loose lead connections. 2. Shorted, grounded or open magneto coil. 3. Shorted or open regulator/rectifier.	Repair or retighten. Replace. Replace.
Magneto charge, but charging rate is below the specifications.	1. Lead wires tend to get shorted or open-circuited or loosely connected at terminal. 2. Grounded or open-circuited stator coils of magneto. 3. Defective regulator/rectifier. 4. Defective cell plates in the battery,	Repair or retighten. Replace. Replace. Replace the battery.
Magneto overcharges.	1. Internal short-circuit in the battery. 2. Resistor element in the regulator/rectifier damaged or defective. 3. Regulator/rectifier unit poorly grounded.	Replace the battery. Replace. Clean and tighten ground connection.

Complaint	Symptom and possible causes	Remedy
Unstable charging.	1. Defective regulator/rectifier. 2. Lead wire insulation frayed due to vibration, resulting in intermittent shorting. 3. Magneto coil internally shorted.	Repair or replace. Replace. Replace.
Starter button is not effective.	1. Battery runs down. 2. Defective switch contacts. 3. Brushes not seating properly on commutator in starter motor. 4. Defective starter relay. 5. Defective starter pinion gears 6. Defective front or rear brake light switches circuit.	Recharge and replace. Replace. Repair or replace. Replace. Replace. Repair or replace.

BATTERY

Complaint	Symptom and possible causes	Remedy
Battery runs down quickly.	1. The charging method is not correct. 2. Cell plates have lost much of their active material as a result of over-charging. 3. A short-circuit condition exists within the battery due to excessive accumulation of sediments caused by the incorrect electrolyte. **4.** Battery is too old.	Check the magneto and regulator/rectifier circuit connections, and make necessary adjustments to obtain specified charging operation. Replace the battery, and correct the charging system. Replace the battery. Replace the battery.
Reversed battery polarity.	1. The battery has been connected the wrong way round in the system, so that it is being charged in the reverse direction.	Replace the battery and be sure to connect the battery properly.
Battery discharges too rapidly.	1. Dirty container top and sides. 2. Battery is too old.	Clean. Replace.

CHASSIS

Complaint	Symptom and possible causes	Remedy
Handling feels too heavy.	1. Steering stem nut over tightened. 2. Broken bearing/race in steering stem. 3. Distorted steering stem. 4. Not enough pressure in tires.	Adjust. Replace. Replace. Adjust.
Wobbly handle.	1. Loss of balance between right and left front suspension. 2. Distorted front axle or crooked tire.	Replace. Replace.

Wobbly front wheel.	1. Distorted wheel rim. 2. Worn front wheel bearings. 3. Defective or incorrect tire. 4. Loose nut on axle. 5. Loose nuts on the rear shock. 6. Worn engine mounting bushing. 7. Loose nuts or bolts for engine mounting.	Replace. Replace. Replace. Retighten. Retighten. Replace. Tighten.
Front suspension too soft.	1. Weakened springs. 2. Oil leakage of shock absorber,	Replace. Replace.
Front suspension too stiff.	1. Not enough grease, 2. Worn suspension arm spacer	Refill. Replace.

Noisy front suspension.	1. Not enough grease. 2. Loose nuts on suspension.	Refill. Retighten.
Wobbly rear wheel.	1. Distorted wheel rim. 2. Defective or incorrect tire. 3. Loose nuts on the rear shock absorber. 4. Worn engine mounting bushing. 5. Loose nuts or bolts for engine mounting.	Replace. Replace. Replace. Replace. Retighten.
Rear suspension too soft.	1. Weakened spring. 2. Oil leakage of rear shock absorber.	Replace. Add lubrication
Noisy rear suspension.	1. Loose nuts on shock absorber, 2. Lubrication leakage.	Adjust Add lubrication.

BRAKES

Complaint	Symptom and possible causes	Remedy
Insufficient brake power.	1. Leakage of brake fluid from hydraulic system. 2. Worn pad. 3. Oil adhesion on engaging surface of pad. 4. Worn disc. 5. Air entered into hydraulic system. 6. Worn shoe. 7. Friction surfaces of shoes are dirty with oil. 8. Excessively worn drum. **9.** Too much brake lever play.	Repair or replace. Replace. Clean disc and pads. Replace. Bleed air. Replace. Replace. Replace. Adjust.
Brake squeaking.	1. Carbon adhesion on pad surface. 2. Tilted pad. 3. Damaged wheel bearing. 4. Worn pad. 5. Foreign substance entered into brake fluid. 6. Clogged return port of master cylinder. 7. Brake shoe surface glazed. 8. Loose front-wheel axle or rear-wheel axle nut. 9. Worn shoe.	Repair surface with sandpaper. Modify and fitting. Replace. Replace. Replace brake fluid. Disassemble and clean master cylinder. Repair surface with sandpaper, Tighten to specified torque. Replace.
Excessive brake lever stroke.	1. Air entered into hydraulic system. 2. Insufficient brake fluid. 3. Improper quality of brake fluid. 4. Worn brake cam lever. 5. Excessively worn shoes and/or drum.	Adjust Refill Replace Replace Replace
Leakage of brake fluid.	1. Insufficient tightening of connection joints. 2. Cracked hose. 3. Worn piston seal.	Replace or repair Replace. Replace.
Brake drags.	1. Rusty moving parts.	Replace

WIRE, CABLE AND BRAKE HOSE ROUTING

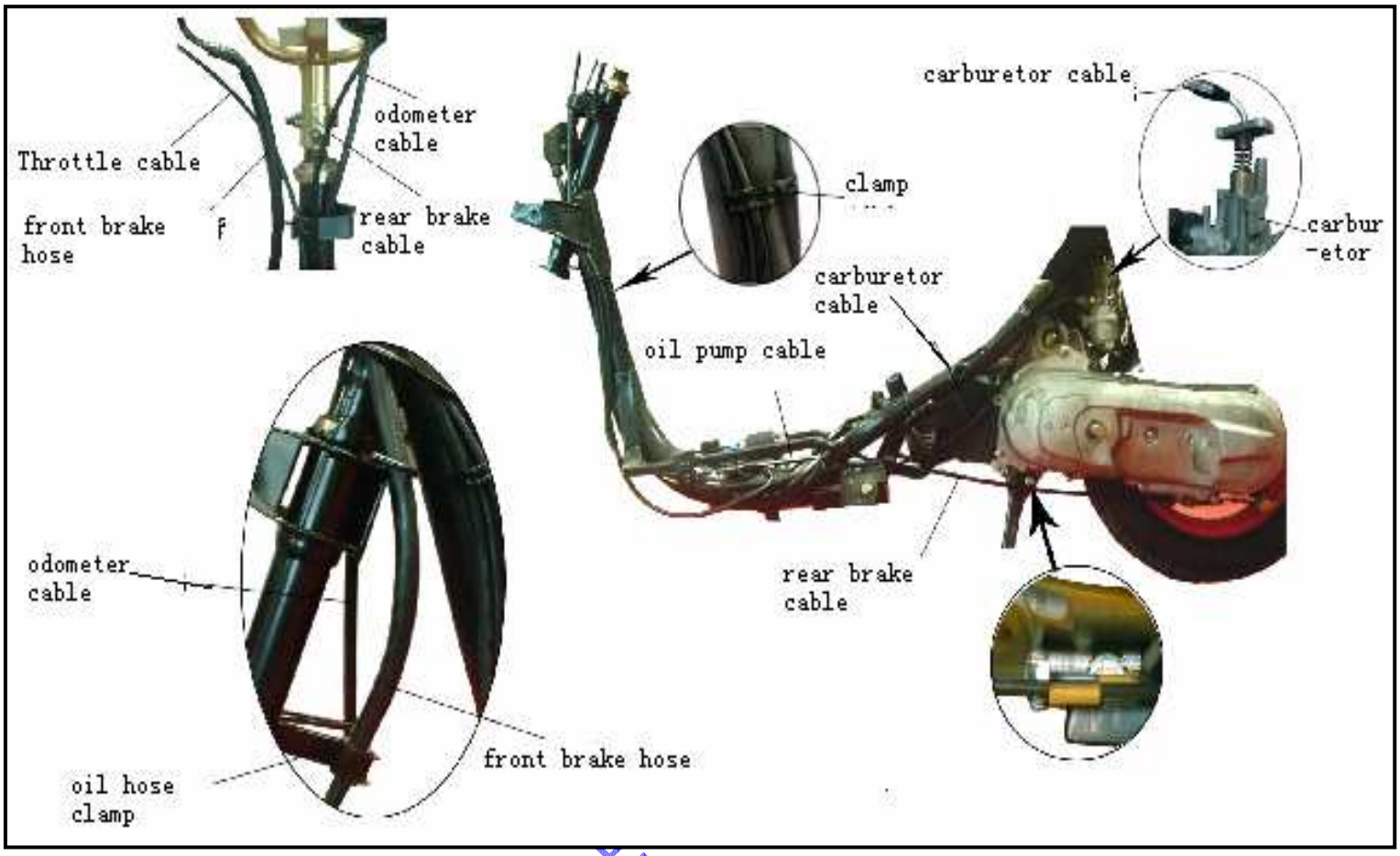

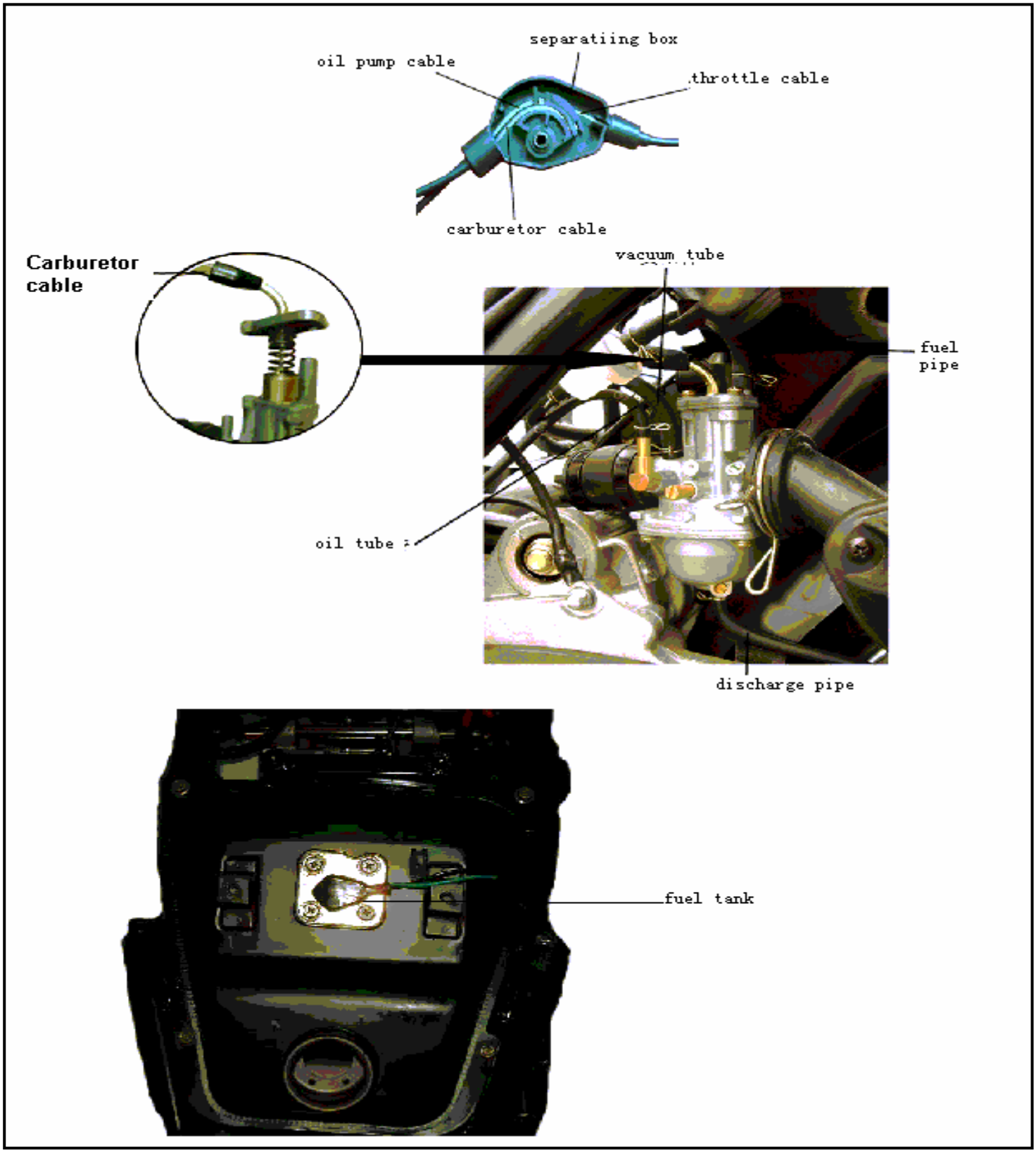

VENTO MOTORCYCLES

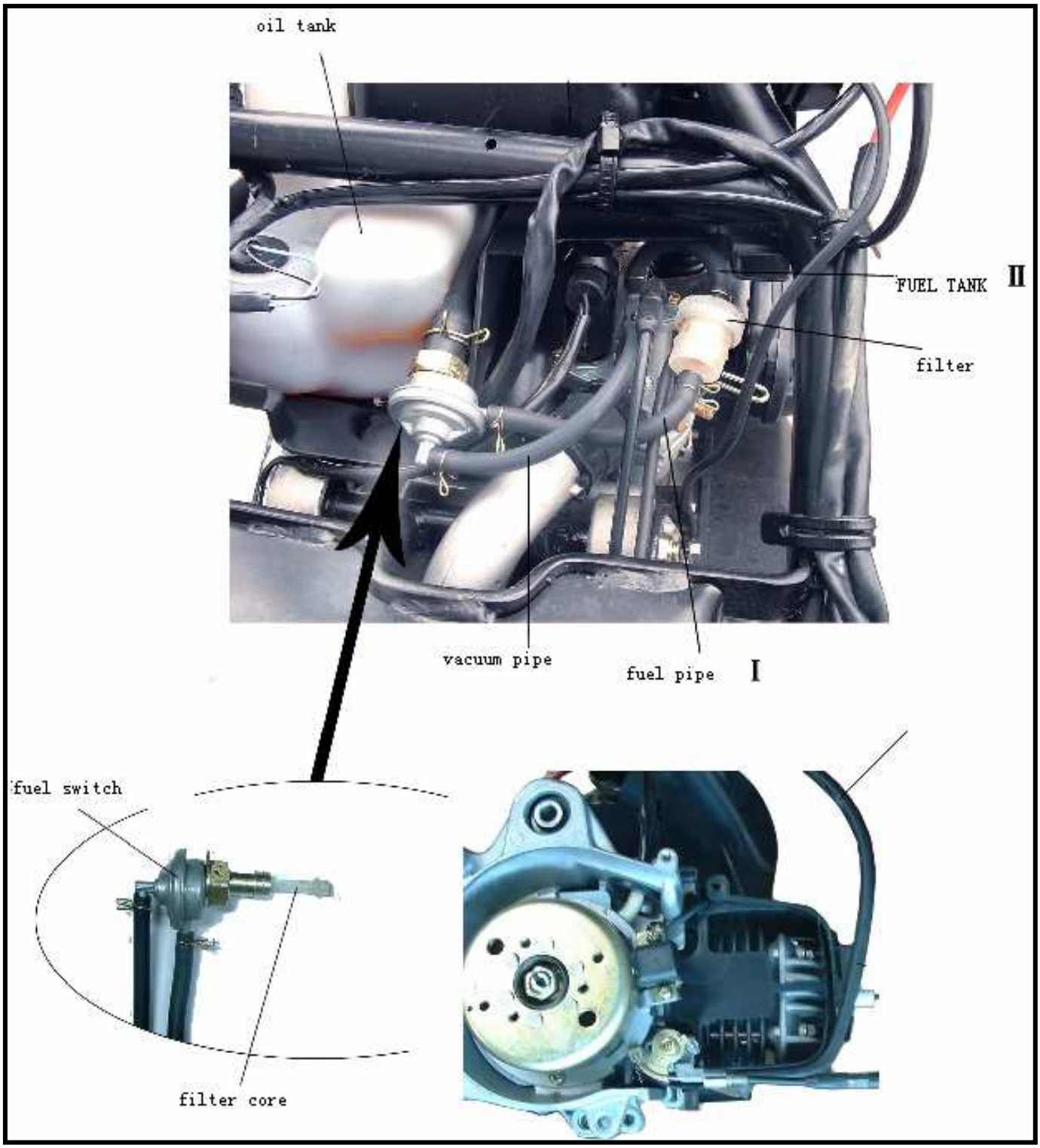

VENTO MOTORCYCLES

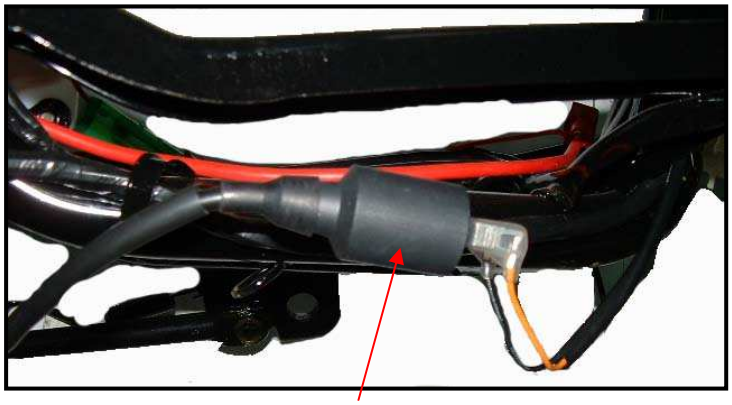

Ignition coil

Starting relay

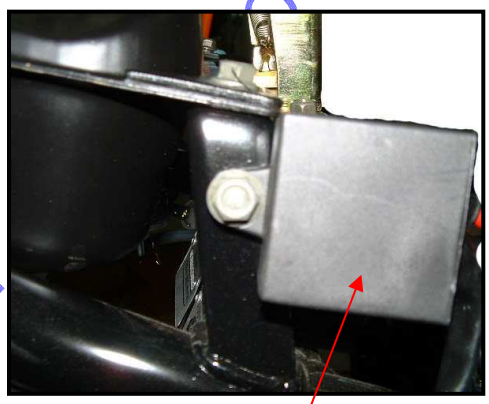

CDI

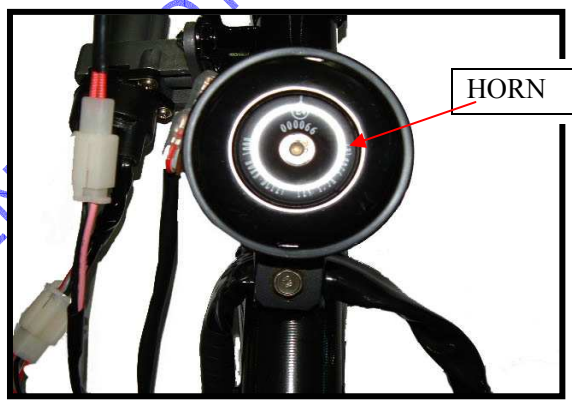

HORN

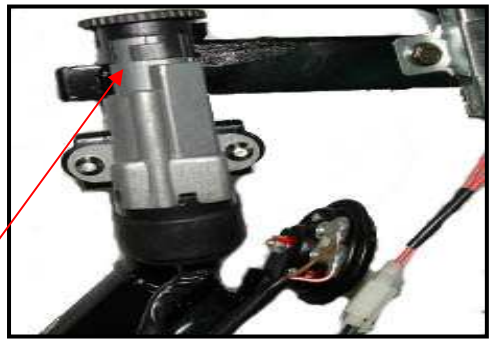

POWER SWITCH

SPECIAL TOOLS LISTED BELOW FOR REMOVAL AND REINSTALLATION

NO.	TOOL NUMBER	DESCRIPTION
1	T01	“T”shape of sleeve
2	T02	Sleeve tools□7mm,8mm,10mm,12mm,13mm□
3	T03	Flywheel remover
4	T04	Sleeve (18mm,24mm)
5	T05	Screw remover
6	T06	Cylinder pressure gauge
7	T07	Piston pin remover
8	T08	Spark plug remover
9	T10	Flywheel lock bolt remover
10	T 11	Clutch clamp

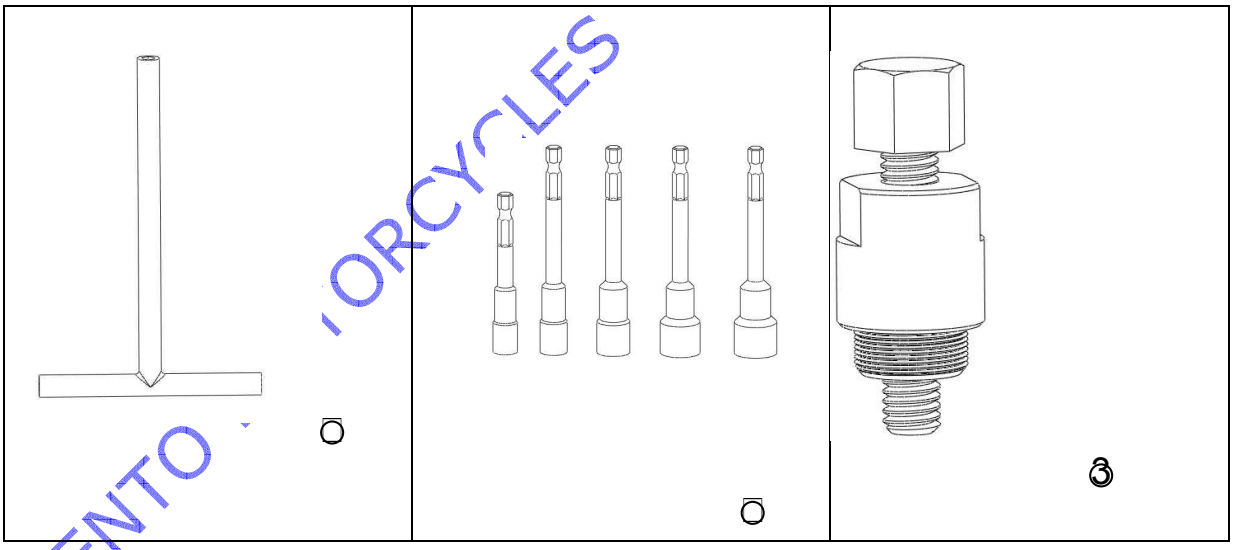

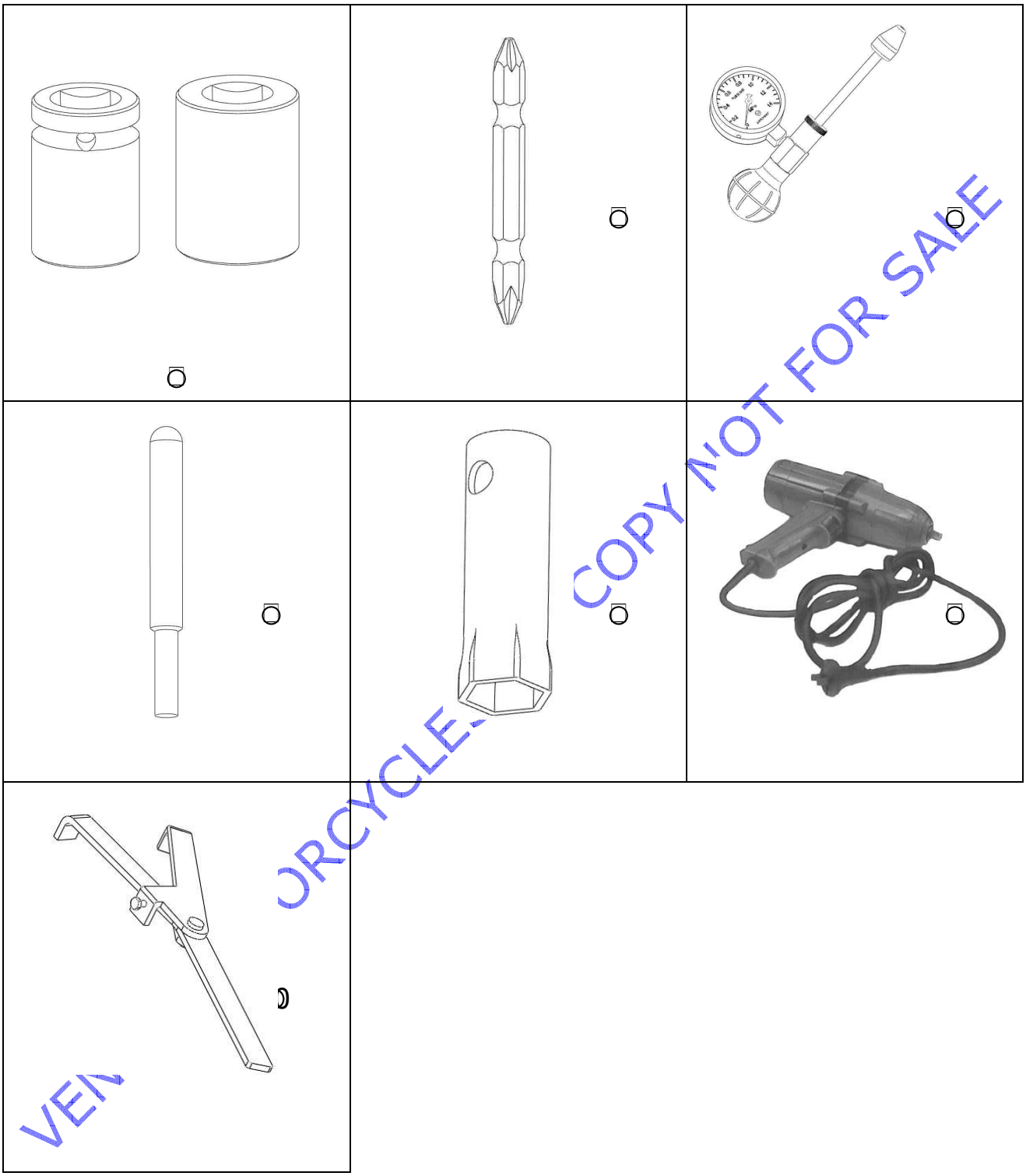

TIGHTENTING TORQUE O F SCREW THREAD PARTS

ENGINE

ITEM	N□M
Cylinder guide cover tapping screw	1-4
Fan guide cover lock bolt	10-12
Cylinder cover locknut	15-18
Spark plug	15-18
Inlet pipe lock bolt	10-12
Cooling fan impeller lock screw	10-12
Flywheel lock bolt	45-50
Magneto stator coil lock screw	10-12
Magneto exciting lock screw	3-5
Oil pump lock screw	5-9
Right crankcase lock bolt	10-12
Bearing press board lock bolt	10-12
Cylinder double head bolt	15-18
Motor tightening bolt	10-12
Left crankcase cover lock screw	10-12
Left crankcase cover lock bolt	10-12
Main drive wheel face locknut	35-38
Driven wheel face locknut	35-38
Driven wheel face clutch locknut	55-60
Exceeding clutch outside lock screw	10-12
Electrical start idle press board screw	10-12
Gear case lock bolt	10-12
Left crankcase discharging oil hole lock bolt	22-25
Left crankcase positioning pin shaft locknut	18-22

SERVICING DATA

CYLINDER+PISTON+PISTON RING

DESCRIPTION	STANDARD		TOLERANCE mm(In)
Piston to cylinder clearance	0.06-0.07 (0.0024-0.0028)		0.120 (0.0047)
Cylinder bore	40.005-40.020 (1.5750-1.5756)		40.075 (1.5778)
Piston diameter	39.94-39.955 (1.5724-1.5746)		39.885 (1.5703)
Cylinder distortion	———		0.04 (0.0016)
Cylinder head distortion	———		0.04 (0.0016)
Piston ring free cotter end clearance	1st ring	0.02~0.06mm	———
	2en ring	0.02~0.06mm	———
Piston ring close end clearance	0.15-0.35 (0.0059-0.0138)		0.8 (0.0315)
Piston ring to groove clearance	1st ring	0.02~0.06(0.0008~0.0024)	
	2en ring	0.02~0.06(0.0008~0.0024)	
Piston pin bore	10.002-10.008 (0.3938-0.3940)		10.030 (0.3949)
Piston pin outside diameter	9.994-10.000 (0.3935-0.3937)		9.98 (0.3929)

CONNECTING ROD+CRANKSHAFT

DESCRIPTION	STANDARD	LIMIT
Conrod small end	13.995-14.006(0.5510-0.5514)	14.040(0.5528)
Conrod deflection	———	3.0(0.12)
Conrod web to web width	38-38.1(1.496-1.500)	———
Crankshaft runout	———	0.05(0.002)

OIL PUMP

DESCRIPTION	SPECIFICATION
Pump reduction ratio	39.000(39/1)
CCI pump discharge ratio(full open)	1.1-1.3ml/5min(working pressure is 0.06Mpa and rotating speed 118r/min)

CLUTCH

DESCRIPTION	STANDARD mm(in)	LIMIT mm(in)
Clutch wheel inner diameter	112.00-112.15(4.410-4.415)	112.5(4.429)
Clutch shoe thickness	1.8(0.071)	1.2(0.005)
Clutch engagement	3000±300r/min	
Clutch closedown	6000±300r/min	

TRANSMISSION SYSTEM (Gear Ratio)

DESCRIPTION	STANDARD	TOLERANCE
Final reduction ratio	/	/
Gear reduction ratio	/	/
Drive belt width	16.8-17.2(0.6614-0.6772)	16.4(0.6457)
Driven face spring free distance	69(2.72)	64.5(2.54)

CARBURETOR

Manufacturer and type	Side draft
Identification code	PZ19JB
Venturi	19mm
Main jet size	#80
Pilot jet size	#57.5
Needle position	3rd groove from top
Idle air adjusting screw	Open $1\frac{1}{2} \pm \frac{1}{2}$ turnout(counter clock wise)
Float height	13±1mm

ELECTRICAL

DESCRIPTION	SPECIFICATION		NOTE
Ignition timing	15^0 AT 1500RPM		
Spark plug	TYPE	NGK/R/BR8HSA	
	GAP	0.6~0.8mm□0.020~0.028□	
Ignition coil resistance	Primary /secondary	0.2Ω~0.3Ω/7KΩ~10KΩ	Plug cap-ground

DESCRIPTION	SPECIFICATION	NOTE
Magneto coil resistance	Lighting <2Ω	Green/Red□GROUND
	Charging <2Ω	White □Ground
	Exciting 200±20Ω at 20□	Blue□White or Green □White□Ground
Generator no-load voltage	More than 52 V at 5000r/min	
Regulated voltage	More than 12-14V at 5000r/min	

WATTAGE

DESCRIPTION	SPECIFICATION
Headlight high beam/	12V 35W/35W
Dipped headlight	12V 35W
Taillight	12V 21W/5W
Front turn light	12V 10W
Rear turn light	12V 10W
Turning signal indicator light	12V 3W
High beam indicator light	12V 1.7 W
Meter indicator light	12V 1.7 W
Alarm indicator light	Light diode

Brake and rim

Description	Specification		Tolerance
Brake lever play	Rear	15-20mm	/
Hub diameter	Rear	φ110 mm	φ110.7 mm
Brake shoe thickness	Rear	4mm	2.5 mm
Brake disc thickness	front	4.0±0.2	3 mm
Tire size	Front/rear	120/70-12 130/70-12	/
Tire surface thickness	front/rear	120/130	/

SUSPENSION

Front shock absorber stroke	88 mm	Rear shock absorber stroke	45 mm

Tire pressure

Front tire air pressure	175kpa	Rear tire air pressure	196kpa

Fuel +Engine oil

Description	Specification	Remark
Fuel type	Unleaded gasoline 90 or high octane number is recommended.	
Fuel tank capacity	5.2L	
Gear oil	SAE85/90	
Gear oil capacity	0.10 ±0.01L	
Gear oil change period	2000 Kms	
Engine Oil tank capacity	0.9±0.1L	
Engine oil grade	2 T Oil	
Brake fluid grade	DOT3 or DOT4	